TOWN OF WELLFLEET

300 MAIN STREET WELLFLEET MASSACHUSETTS 02667
Tel (508) 349-0300 Fax (508) 349-0305
www.wellfleetma.org

Request for Bids
Repair of Wellfeet Transfer Station

Request for Bids
Sealed bids for **Repair of Wellfleet Transfer Station** will be accepted by the Town Administrator at 300 Main St., Wellfleet, MA 02667 until end of business day August 16th, 2016. A copy of the bid specs may be obtained by contacting the Asst. Public Works Directors office (508) 349-0315 or by email paul.lindberg@wellfleet-ma.gov . Copies of the bid specs are also available on the Wellfleet web site at wellfleetma.org "Invitation to Bid" section. Vendors who download the bid specs from the town website are required to contact the Asst. Public Works Director by email so they may be advised of any bid addenda.

I. Project Description
Remove existing metal siding, metal roofing, girts, conduits, lights and wiring. Dispose of materials in legal manner. Clean remaining metal framing, including gates, prime as necessary to prepare for painting. Paint metal as described in documents. Replace removed framing and siding with new girts, siding and roofing. Town will replace conduits, wiring and lights with code compliant materials of similar type.

II. Description of Work:
Contractor Responsibility
The contractor will supply tools and labor and be responsible for installation in accordance with the attached plan.

Town Responsibility
1. Permitting:
The Town will obtain all necessary permits and approvals including; building permit, approval from Mass DEP and approval from the Wellfleet Board of Health.

2. Site Preparation:
The Town will be responsible for the preparation of the site.

3. Plumbing Requirements:
The Town will be responsible for any plumbing and septic disposal requirements, if applicable.

4. Electrical Requirements
The town will be responsible for any electrical requirements, if applicable.

Site Visits

Vendors may visit the Wellfleet Transfer Station at 370 Coles Neck Road, Wellfleet to see the location during regular business hours. Contact Paul Lindberg, Asst. Public Works Director at 508-349-0315 to arrange for a guided site visit.

III. Project Requirements

A. Timing of Work: Upon receipt of a "Notice to Proceed" the contractor will complete the project as rapidly as practical but shall start work within ten (10) calendar days, unless otherwise agreed upon. The contractor shall complete all work defined within the scope of services no later than December 1, 2016, unless otherwise agreed upon. Construction activities will be agreed upon and coordinated with the Department of Public Works.

B. Prevailing Wages

Minimum wage rates as determined by the Commissioner of Department of Workforce Development under the provisions of MGL 149, Sections 26 to 27D as amended apply to this project.

C. Insurance

Vendor shall provide proof of liability insurance with the following minimum limits –

a) General Liability with limit of $1,000,000.00

b) Automobile Liability with limits of $250,000.00 per person and $500,000.00 per occurrence

c) Workers Compensation with limit of $500,000.00

D. Bid Bond – Bids must be accompanied by a <u>certified or bank check or bid bond</u>. The amount of the bid deposit shall be an amount of five (5%) of the Bidder's maximum total bid price, payable to the Town of Wellfleet, Massachusetts. The bid security will be retained until the successful bidder has executed the contract with the Town, whereupon it will be returned. If the bidder fails to execute the contract and provide the information within five (5) working days of the Notice of Award, the Town may annul the award and the bid security will be forfeited.

E. 50% Payment Bond - A 50% payment bond is required as a condition for this project. The bond will ensure payment of all subcontractors and vendors for materials.

F. Warranty

The contractor shall warranty the work for one calendar year beginning on the date of town acceptance of substantial completion.

V. Bidding Information Submittal Requirements

<u>Bid Notice</u>

Sealed bids for Repair of Wellfleet Transfer Station for the Town of Wellfleet, MA will be received by the Town Administrator at 300 Main St., Wellfleet, MA 02667 until end of business day August 16th, 2016. A copy of the bid specs may be obtained by contacting the Asst. Public Works Directors office (508) 349-0315 or by email paul.lindberg@wellfleet-ma.gov

The Town of Wellfleet reserves the right to waive any informality, to reject any and or all bids, and to act at all times in the best interest of the Town.

<u>Required Submittals with Bid</u>

1. Completed bid form
2. Bid Bond – Bids must be accompanied by a certified or bank check or bid bond, subject to the conditions provided in the Instructions to Bidders. The amount of the bid deposit shall be an amount of five (5%) of the Bidder's maximum total bid price, payable to the Town of Wellfleet, Massachusetts. The bid security will be retained until the successful bidder has executed the contract with the Town, whereupon it will be returned. If the bidder fails to execute the contract and provide the information within five (5) working days of the Notice of Award, the Town may annul the award and the bid security will be forfeited.
3. References – please submit a list of references (names, addresses, telephone #) of three recent comparable projects completed within the past three years.
4. Statement of Tax Compliance – must be completed, signed and submitted with bid.
5. Statement of Non-Collusion – must be completed, signed and submitted with bid.
6. Acknowledgement of Principal – must be completed, signed and submitted with bid.
7. Vendor shall provide proof of liability insurance with the following minimum limits –
   a) General Liability with limit of $1,000,000.00
   b) Automobile Liability with limits of $250,000.00 per person and $500,000.00 per occurrence
   c) Workers Compensation with limit of $500,000.00
8. **OSHA 10 certification required.**

Contact Information

Paul Lindberg
Asst. Public Works Director
220 West Main Street
Wellfleet, MA 02667
Telephone: 508-349-0315
E-mail: paul.lindberg@wellfleet.ma.gov

TOWN OF WELLFLEET

300 MAIN STREET WELLFLEET MASSACHUSETTS 02667
Tel (508) 349-0300 Fax (508) 349-0305
www.wellfleetma.org

Bid Pricing Sheet

In accordance with the Scope of Services described in the bid specifications I bid the following price(s).

1. Overall price_____

_____ _____
Name of Authorized Person (print) Date

_____ _____
Signature of Authorized Person email address

_____
Name of Company/Corporation/Partnership

_____ _____
Address (# Street or PO Box telephone #

_____
Town/State/Zip Code

TOWN OF WELLFLEET

300 MAIN STREET WELLFLEET MASSACHUSETTS 02667
Tel (508) 349-0300 Fax (508) 349-0305
www.wellfleetma.org

Statement of State Tax Compliance

Description of Bid/Proposal _____

_____

Date of Bid _____

Pursuant to Chapter 323 of the Acts of 1983, Section 49A, I _____

_____ Authorized signatory for _____

_____, whose principal place of

business is _____ do

hereby certify under the pains of perjury that _____

has complied with all laws of the Commonwealth relating to taxes.

_____ _____
Name of Person Signing Bid/Proposal SSN or FID #

_____ _____
Name of Business Date

This form must be included with the bid/proposal.

TOWN OF WELLFLEET

300 MAIN STREET WELLFLEET MASSACHUSETTS 02667
Tel (508) 349-0300 Fax (508) 349-0305
www.wellfleetma.org

Certificate of Non-Collusion

Description of Bid/Proposal _____

_____

Date of Bid _____

The undersigned certifies under penalties of perjury that the above bid or proposal has been made and submitted in good faith and without collusion or fraud with any other person. As used in this certification, the word "person" shall mean any natural person, business, partnership, corporation, union, committee, club or other organization, entity or group of individuals.

_____
Name of Person Signing Bid/Proposal

_____
Name of Business

This form must be included with the bid/proposal.

TOWN OF WELLFLEET

300 MAIN STREET WELLFLEET MASSACHUSETTS 02667
Tel (508) 349-0300 Fax (508) 349-0305
www.wellfleetma.org

Acknowledgement of Principal

I_____ principal of _____

_____

Holding the office of _____with said Company is hereby authorized to submit a bid/proposal on behalf of said Company for the following bid/proposal to the Town of Wellfleet: _____

_____.

_____ _____
Name of Authorizing Person Position/Office

_____ _____
Name of Business Date

_____
Name of Company/Corporation/Partnership

_____ _____
Address (# Street or PO Box telephone #

_____ _____
Town/State/Zip Code email address

This form must be included with the bid/proposal.

SECTION 01100 - SUMMARY

PART 1 - GENERAL

1.1 SUMMARY

A. This Section includes the following:

1. Work covered by the Contract Documents.
2. Work phases.
3. Work under other contracts.
4. Use of premises.
5. Owner's occupancy requirements.
6. Specification formats and conventions.

B. See Division 1 Section "Summary of Multiple Contracts" for division of responsibilities for the Work.

1.2 WORK COVERED BY CONTRACT DOCUMENTS

A. Project Identification: Repair of Wellfleet Transfer Station, CEC Job Number C18408.00

1. Project Location: 370 Coles Neck Road , Wellfleet, MA

B. Owner: Town of Wellfleet
1. Owner's Representative: Paul Lindberg, Assistant Public Works Director
paul.lindberg@wellfleet-ma.gov
Tel.: 508-349-0315

C. Engineer: Paul LaRochelle, P.E.
Coastal Engineering Company, Inc.
260 Cranberry Highway
Orleans, MA 02653
Tel.: 508-255-6511

D. The Work consists of the following:

1. The Work includes removal of existing steel siding, roofing, girts, conduits, wiring and lights. Disposing removed materials removed legally. Cleaning remaining steel, including gates, to allow for priming and painting. Replace girts, siding and roofing with new materials of same. Town will replace electrical systems as needed.

E. Project will be constructed under a single prime contract.

1.3 USE OF PREMISES

A. General: Contractor shall have full use of premises for construction operations, including use of Project site, during construction period. Contractor's use of premises is limited only by Owner's right to perform work or to retain other contractors on portions of Project.

1.4 OWNER'S OCCUPANCY REQUIREMENTS

A. Partial Owner Occupancy: Owner will occupy the premises during entire construction period, with the exception of areas under construction. Cooperate with Owner during construction operations to minimize conflicts and facilitate Owner usage. Perform the Work so as not to interfere with Owner's operations. Maintain existing exits, unless otherwise indicated.

1. Maintain access to existing walkways and other adjacent occupied or used facilities. Do not close or obstruct walkways or other occupied or used facilities without written permission from Owner and authorities having jurisdiction.

1.5 SPECIFICATION FORMATS AND CONVENTIONS

A. Specification Format: The Specifications are organized into Divisions and Sections using the 16-division format and CSI/CSC's "MasterFormat" numbering system.

1. Division 1: Sections in Division 1 govern the execution of the Work of all Sections in the Specifications.

B. Specification Content: The Specifications use certain conventions for the style of language and the intended meaning of certain terms, words, and phrases when used in particular situations. These conventions are as follows:

1. Abbreviated Language: Language used in the Specifications and other Contract Documents is abbreviated. Words and meanings shall be interpreted as appropriate. Words implied, but not stated, shall be inferred as the sense requires. Singular words shall be interpreted as plural, and plural words shall be interpreted as singular where applicable as the context of the Contract Documents indicates.
2. Imperative mood and streamlined language are generally used in the Specifications. Requirements expressed in the imperative mood are to be performed by Contractor. Occasionally, the indicative or subjunctive mood may be used in the Section Text for clarity to describe responsibilities that must be fulfilled indirectly by Contractor or by others when so noted.

a. The words "shall," "shall be," or "shall comply with," depending on the context, are implied where a colon (:) is used within a sentence or phrase.

PART 2 - PRODUCTS (Not Used)

PART 3 - EXECUTION (Not Used)

END OF SECTION 01100

SECTION 01250 - CONTRACT MODIFICATION PROCEDURES

PART 1 - GENERAL

1.1 SUMMARY

A. This Section specifies administrative and procedural requirements for handling and processing Contract modifications.

1.2 MINOR CHANGES IN THE WORK

A. Engineer will issue supplemental instructions authorizing Minor Changes in the Work, not involving adjustment to the Contract Sum or the Contract Time, on AIA Document G710, "Architect's Supplemental Instructions."

1.3 PROPOSAL REQUESTS

A. Owner-Initiated Proposal Requests: Engineer will issue a detailed description of proposed changes in the Work that may require adjustment to the Contract Sum or the Contract Time. If necessary, the description will include supplemental or revised Drawings and Specifications.

1. Proposal Requests issued by Engineer are for information only. Do not consider them instructions either to stop work in progress or to execute the proposed change.
2. Within time specified in Proposal Request after receipt of Proposal Request, submit a quotation estimating cost adjustments to the Contract Sum and the Contract Time necessary to execute the change.

    a. Include a list of quantities of products required or eliminated and unit costs, with total amount of purchases and credits to be made. If requested, furnish survey data to substantiate quantities.
    b. Indicate applicable taxes, delivery charges, equipment rental, and amounts of trade discounts.
    c. Include costs of labor and supervision directly attributable to the change.
    d. Include an updated Contractor's Construction Schedule that indicates the effect of the change, including, but not limited to, changes in activity duration, start and finish times, and activity relationship. Use available total float before requesting an extension of the Contract Time.

B. Contractor-Initiated Proposals: If latent or unforeseen conditions require modifications to the Contract, Contractor may propose changes by submitting a request for a change to Engineer.

1. Include a statement outlining reasons for the change and the effect of the change on the Work. Provide a complete description of the proposed change. Indicate the effect of the proposed change on the Contract Sum and the Contract Time.
2. Include a list of quantities of products required or eliminated and unit costs, with total amount of purchases and credits to be made. If requested, furnish survey data to substantiate quantities.

3. Indicate applicable taxes, delivery charges, equipment rental, and amounts of trade discounts.
4. Include costs of labor and supervision directly attributable to the change.
5. Include an updated Contractor's Construction Schedule that indicates the effect of the change, including, but not limited to, changes in activity duration, start and finish times, and activity relationship. Use available total float before requesting an extension of the Contract Time.
6. Comply with requirements in Division 1 Section "Product Requirements" if the proposed change requires substitution of one product or system for product or system specified.

C. Proposal Request Form: Use forms provided by Owner.

1.4 ALLOWANCES

A. Allowance Adjustment: To adjust allowance amounts, base each Change Order proposal on the difference between purchase amount and the allowance, multiplied by final measurement of work-in-place. If applicable, include reasonable allowances for cutting losses, tolerances, mixing wastes, normal product imperfections, and similar margins.

1. Include installation costs in purchase amount only where indicated as part of the allowance.
2. If requested, prepare explanation and documentation to substantiate distribution of overhead costs and other margins claimed.
3. Submit substantiation of a change in scope of work, if any, claimed in Change Orders related to unit-cost allowances.
4. Owner reserves the right to establish the quantity of work-in-place by independent quantity survey, measure, or count.

B. Submit claims for increased costs because of a change in scope or nature of the allowance described in the Contract Documents, whether for the Purchase Order amount or Contractor's handling, labor, installation, overhead, and profit. Submit claims within 21 days of receipt of the Change Order or Construction Change Directive authorizing work to proceed. Owner will reject claims submitted later than 21 days after such authorization.

1. Do not include Contractor's or subcontractor's indirect expense in the Change Order cost amount unless it is clearly shown that the nature or extent of work has changed from what could have been foreseen from information in the Contract Documents.
2. No change to Contractor's indirect expense is permitted for selection of higher- or lower-priced materials or systems of the same scope and nature as originally indicated.

1.5 CHANGE ORDER PROCEDURES

A. On Owner's approval of a Proposal Request, Architect will issue a Change Order for signatures of Owner and Contractor on AIA Document G701.

1.6 CONSTRUCTION CHANGE DIRECTIVE

A. Work Change Directive: Engineer may issue a Work Change Directive on AIA Document G714. Work Change Directive instructs Contractor to proceed with a change in the Work, for subsequent inclusion in a Change Order.

1. Work Change Directive contains a complete description of change in the Work. It also designates method to be followed to determine change in the Contract Sum or the Contract Time.

B. Documentation: Maintain detailed records on a time and material basis of work required by the Work Change Directive.

1. After completion of change, submit an itemized account and supporting data necessary to substantiate cost and time adjustments to the Contract.

PART 2 - PRODUCTS (Not Used)

PART 3 - EXECUTION (Not Used)

END OF SECTION 01250

SECTION 01290 - PAYMENT PROCEDURES

PART 1 - GENERAL

1.1 SUMMARY

A. This Section specifies administrative and procedural requirements necessary to prepare and process Applications for Payment.

1.2 SCHEDULE OF VALUES

A. Coordination: Coordinate preparation of the Schedule of Values with preparation of Contractor's Construction Schedule.

B. Correlate line items in the Schedule of Values with other required administrative forms and schedules, including Application for Payment forms with Continuation Sheets.

1. Submit the Schedule of Values to Engineer at earliest possible date but no later than seven days before the date scheduled for submittal of initial Applications for Payment.

C. Format and Content: Use the Project Manual table of contents as a guide to establish line items for the Schedule of Values. Provide at least one line item for each Specification Section.

1. Identification: Include the following Project identification on the Schedule of Values:

   a. Project name and location.
   b. Name of Architect.
   c. Architect's project number.
   d. Contractor's name and address.
   e. Date of submittal.

2. Submit draft of AIA Document G703 Continuation Sheets.
3. Provide a breakdown of the Contract Sum in enough detail to facilitate continued evaluation of Applications for Payment and progress reports. Coordinate with the Project Manual table of contents. Provide several line items for principal subcontract amounts, where appropriate.
4. Round amounts to nearest whole dollar; total shall equal the Contract Sum.
5. Provide a separate line item in the Schedule of Values for each part of the Work where Applications for Payment may include materials or equipment purchased or fabricated and stored, but not yet installed.
6. Provide separate line items in the Schedule of Values for initial cost of materials, for each subsequent stage of completion, and for total installed value of that part of the Work.
7. Allowances: Provide a separate line item in the Schedule of Values for each allowance. Show line-item value of unit-cost allowances, as a product of the unit cost, multiplied by measured quantity. Use information indicated in the Contract Documents to determine quantities.

8. Each item in the Schedule of Values and Applications for Payment shall be complete. Include total cost and proportionate share of general overhead and profit for each item.

    a. Temporary facilities and other major cost items that are not direct cost of actual work-in-place may be shown either as separate line items in the Schedule of Values or distributed as general overhead expense, at Contractor's option.

9. Schedule Updating: Update and resubmit the Schedule of Values before the next Applications for Payment when Change Orders or Construction Change Directives result in a change in the Contract Sum.

1.3 APPLICATIONS FOR PAYMENT

A. Each Application for Payment shall be consistent with previous applications and payments as certified by Architect and paid for by Owner.

    1. Initial Application for Payment, Application for Payment at time of Substantial Completion, and final Application for Payment involve additional requirements.

B. Payment Application Times: The date for each progress payment is indicated in the Agreement between Owner and Contractor. The period of construction Work covered by each Application for Payment is the period indicated in the Agreement.

C. Payment Application Times: Progress payments shall be submitted to Engineer by the 15th of the month. The period covered by each Application for Payment is one month, ending on the last day of the month.

D. Payment Application Forms: Use AIA Document G702 and AIA Document G703 Continuation Sheets form for Applications for Payment.

E. Application Preparation: Complete every entry on form. Notarize and execute by a person authorized to sign legal documents on behalf of Contractor. Architect will return incomplete applications without action.

    1. Entries shall match data on the Schedule of Values and Contractor's Construction Schedule. Use updated schedules if revisions were made.
    2. Include amounts of Change Orders and Construction Change Directives issued before last day of construction period covered by application.

F. Transmittal: Submit 3 signed and notarized original copies of each Application for Payment to Engineer by a method ensuring receipt within 24 hours. One copy shall include waivers of lien and similar attachments if required.

    1. Transmit each copy with a transmittal form listing attachments and recording appropriate information about application.

G. Waivers of Mechanic's Lien: With each Application for Payment, submit waivers of mechanic's lien from every entity who is lawfully entitled to file a mechanic's lien arising out of the Contract and related to the Work covered by the payment.

1. Submit partial waivers on each item for amount requested in previous application, after deduction for retainage, on each item.
2. When an application shows completion of an item, submit final or full waivers.
3. Owner reserves the right to designate which entities involved in the Work must submit waivers.
4. Waiver Forms: Submit waivers of lien on forms, executed in a manner acceptable to Owner.

H. Initial Application for Payment: Administrative actions and submittals that must precede or coincide with submittal of first Application for Payment include the following:

1. List of subcontractors.
2. Schedule of Values.
3. Contractor's Construction Schedule (preliminary if not final).
4. Schedule of unit prices.
5. Submittals Schedule (preliminary if not final).
6. List of Contractor's staff assignments.
7. List of Contractor's principal consultants.
8. Copies of building permits.
9. Copies of authorizations and licenses from authorities having jurisdiction for performance of the Work.
10. Initial progress report.
11. Report of preconstruction conference.
12. Certificates of insurance and insurance policies.

I. Application for Payment at Substantial Completion: After issuing the Certificate of Substantial Completion, submit an Application for Payment showing 100 percent completion for portion of the Work claimed as substantially complete.

1. Include documentation supporting claim that the Work is substantially complete and a statement showing an accounting of changes to the Contract Sum.
2. This application shall reflect Certificates of Partial Substantial Completion issued previously for Owner occupancy of designated portions of the Work.

J. Final Payment Application: Submit final Application for Payment with releases and supporting documentation not previously submitted and accepted, including, but not limited, to the following:

1. Evidence of completion of Project closeout requirements.
2. Insurance certificates for products and completed operations where required and proof that taxes, fees, and similar obligations were paid.
3. Updated final statement, accounting for final changes to the Contract Sum.
4. AIA Document G706, "Contractor's Affidavit of Payment of Debts and Claims."
5. AIA Document G706A, "Contractor's Affidavit of Release of Liens."
6. AIA Document G707, "Consent of Surety to Final Payment."
7. Evidence that claims have been settled.
8. Final meter readings for utilities, a measured record of stored fuel, and similar data as of date of Substantial Completion or when Owner took possession of and assumed responsibility for corresponding elements of the Work.
9. Final, liquidated damages settlement statement.

PART 2 - PRODUCTS (Not Used)

PART 3 - EXECUTION (Not Used)

END OF SECTION 01290

SECTION 01330 - SUBMITTAL PROCEDURES

PART 1 - GENERAL

1.1 SUMMARY

A. This Section includes administrative and procedural requirements for submitting Shop Drawings, Product Data, Samples, and other submittals.

B. See Division 1 Section "Quality Requirements" for submitting test and inspection reports.

C. See Division 1 Section "Closeout Procedures" for submitting warranties.

1.2 DEFINITIONS

A. Action Submittals: Written and graphic information that requires Engineer's responsive action.

B. Informational Submittals: Written information that does not require Engineer's responsive action. Submittals may be rejected for not complying with requirements.

1.3 SUBMITTAL PROCEDURES

A. Coordination: Coordinate preparation and processing of submittals with performance of construction activities.

1. Coordinate each submittal with fabrication, purchasing, testing, delivery, other submittals, and related activities that require sequential activity.
2. Coordinate transmittal of different types of submittals for related parts of the Work so processing will not be delayed because of need to review submittals concurrently for coordination.

   a. Architect reserves the right to withhold action on a submittal requiring coordination with other submittals until related submittals are received.

B. Submittals Schedule: Comply with requirements in Division 1 Section "Construction Progress Documentation" for list of submittals and time requirements for scheduled performance of related construction activities.

C. Processing Time: Allow enough time for submittal review, including time for resubmittals, as follows. Time for review shall commence on Architect's receipt of submittal. No extension of the Contract Time will be authorized because of failure to transmit submittals enough in advance of the Work to permit processing, including resubmittals.

1. Initial Review: Allow 15 days for initial review of each submittal. Allow additional time if coordination with subsequent submittals is required. Engineer will advise Contractor when a submittal being processed must be delayed for coordination.
2. Resubmittal Review: Allow 15 days for review of each resubmittal.

D. Identification: Place a permanent label or title block on each submittal for identification.

1. Indicate name of firm or entity that prepared each submittal on label or title block.
2. Provide a space approximately 3 by 4 inches on label or beside title block to record Contractor's review and approval markings and action taken by Architect.
3. Include the following information on label for processing and recording action taken:

a. Project name.
b. Date.
c. Name and address of Architect.
d. Name and address of Contractor.
e. Name and address of subcontractor.
f. Name and address of supplier.
g. Name of manufacturer.
h. Submittal number or other unique identifier, including revision identifier.

1) Submittal number shall use Specification Section number followed by a decimal point and then a sequential number (e.g., 06100.01). Resubmittals shall include an alphabetic suffix after another decimal point (e.g., 06100.01.A).

i. Number and title of appropriate Specification Section.
j. Drawing number and detail references, as appropriate.
k. Location(s) where product is to be installed, as appropriate.
l. Other necessary identification.

E. Deviations: Highlight, encircle, or otherwise specifically identify deviations from the Contract Documents on submittals.

F. Additional Copies: Unless additional copies are required for final submittal, and unless Architect observes noncompliance with provisions in the Contract Documents, initial submittal may serve as final submittal.

1. Additional copies submitted for maintenance manuals will not be marked with action taken and will be returned.

G. Transmittal: Package each submittal individually and appropriately for transmittal and handling. Transmit each submittal using a transmittal form. Engineer will discard submittals received from sources other than Contractor.

1. Transmittal Form: Use AIA Document G810.

H. Resubmittals: Make resubmittals in same form and number of copies as initial submittal.

1. Note date and content of previous submittal.
2. Note date and content of revision in label or title block and clearly indicate extent of revision.
3. Resubmit submittals until they are marked "Approved or Approved with corrections."

I. Distribution: Furnish copies of final submittals to manufacturers, subcontractors, suppliers, fabricators, installers, authorities having jurisdiction, and others as necessary for performance of construction activities. Show distribution on transmittal forms.

J. Use for Construction: Use only final submittals with mark indicating "Approved or Approved with Corrections" taken by Engineer.

1.4 CONTRACTOR'S USE OF ENGINEER'S CAD FILES

A. General: At Contractor's written request, copies of Engineer's CAD files will be provided to Contractor for Contractor's use in connection with Project, subject to the following conditions:

1. Signed form of the “CAD File Transfer Agreement” from the engineer’s office.

PART 2 - PRODUCTS

2.1 ACTION SUBMITTALS

A. General: Prepare and submit Action Submittals required by individual Specification Sections.

B. Product Data: Collect information into a single submittal for each element of construction and type of product or equipment.

1. If information must be specially prepared for submittal because standard printed data are not suitable for use, submit as Shop Drawings, not as Product Data.
2. Mark each copy of each submittal to show which products and options are applicable.
3. Include the following information, as applicable:

a. Manufacturer's written recommendations.
b. Manufacturer's product specifications.
c. Manufacturer's installation instructions.
d. Manufacturer's catalog cuts.
e. Wiring diagrams showing factory-installed wiring.
f. Printed performance curves.
g. Operational range diagrams.
h. Compliance with specified referenced standards.
i. Testing by recognized testing agency.

4. Number of Copies: Submit three copies of Product Data, unless otherwise indicated. Architect will return two copies. Mark up and retain one returned copy as a Project Record Document.

C. Shop Drawings: Prepare Project-specific information, drawn accurately to scale. Do not base Shop Drawings on reproductions of the Contract Documents or standard printed data.

1. Preparation: Fully illustrate requirements in the Contract Documents. Include the following information, as applicable:

a. Dimensions.

b. Identification of products.
c. Fabrication and installation drawings.
d. Roughing-in and setting diagrams.
e. Wiring diagrams showing field-installed wiring, including power, signal, and control wiring.
f. Shopwork manufacturing instructions.
g. Templates and patterns.
h. Schedules.
i. Notation of coordination requirements.
j. Notation of dimensions established by field measurement.
k. Relationship to adjoining construction clearly indicated.
l. Seal and signature of professional engineer if specified.
m. Wiring Diagrams: Differentiate between manufacturer-installed and field-installed wiring.

2. Sheet Size: Except for templates, patterns, and similar full-size drawings, submit Shop Drawings on sheets at least 8-1/2 by 11 inches but no larger than 24 by 36 inches.
3. Number of Copies: Submit two opaque (bond) copies of each submittal. Engineer will return one copy.

D. Samples: Submit Samples for review of kind, color, pattern, and texture for a check of these characteristics with other elements and for a comparison of these characteristics between submittal and actual component as delivered and installed.

1. Transmit Samples that contain multiple, related components such as accessories together in one submittal package.
2. Identification: Attach label on unexposed side of Samples that includes the following:

a. Generic description of Sample.
b. Product name and name of manufacturer.
c. Sample source.
d. Number and title of appropriate Specification Section.

3. Disposition: Maintain sets of approved Samples at Project site, available for quality-control comparisons throughout the course of construction activity. Sample sets may be used to determine final acceptance of construction associated with each set.
4. Samples for Initial Selection: Submit manufacturer's color charts consisting of units or sections of units showing the full range of colors, textures, and patterns available.

a. Number of Samples: Submit one full set(s) of available choices where color, pattern, texture, or similar characteristics are required to be selected from manufacturer's product line. Engineer will return submittal with options selected.

5. Samples for Verification: Submit full-size units or Samples of size indicated, prepared from same material to be used for the Work, cured and finished in manner specified, and physically identical with material or product proposed for use, and that show full range of color and texture variations expected. Samples include, but are not limited to, the following: partial sections of manufactured or fabricated components; small cuts or containers of materials; complete units of repetitively used materials; and components used for independent testing and inspection.

E. Application for Payment: Comply with requirements specified in Division 1 Section "Payment Procedures."

F. Schedule of Values: Comply with requirements specified in Division 1 Section "Payment Procedures."

G. Subcontract List: Prepare a written summary identifying individuals or firms proposed for each portion of the Work, including those who are to furnish products or equipment fabricated to a special design. Include the following information in tabular form:

1. Number of Copies: Submit one copy of subcontractor list, unless otherwise indicated.

2.2 INFORMATIONAL SUBMITTALS

A. General: Prepare and submit Informational Submittals required by other Specification Sections.

1. Number of Copies: Submit one copy of each submittal, unless otherwise indicated. Engineer will not return copies.
2. Certificates and Certifications: Provide a notarized statement that includes signature of entity responsible for preparing certification. Certificates and certifications shall be signed by an officer or other individual authorized to sign documents on behalf of that entity.
3. Test and Inspection Reports: Comply with requirements specified in Division 1 Section "Quality Requirements."

B. Welding Certificates: Prepare written certification that welding procedures and personnel comply with requirements in the Contract Documents. Submit record of Welding Procedure Specification (WPS) and Procedure Qualification Record (PQR) on AWS forms. Include names of firms and personnel certified.

C. Installer Certificates: Prepare written statements on manufacturer's letterhead certifying that Installer complies with requirements in the Contract Documents and, where required, is authorized by manufacturer for this specific Project.

D. Manufacturer Certificates: Prepare written statements on manufacturer's letterhead certifying that manufacturer complies with requirements in the Contract Documents. Include evidence of manufacturing experience where required.

E. Product Certificates: Prepare written statements on manufacturer's letterhead certifying that product complies with requirements in the Contract Documents.

F. Material Certificates: Prepare written statements on manufacturer's letterhead certifying that material complies with requirements in the Contract Documents.

G. Material Test Reports: Prepare reports written by a qualified testing agency, on testing agency's standard form, indicating and interpreting test results of material for compliance with requirements in the Contract Documents.

H. Product Test Reports: Prepare written reports indicating current product produced by manufacturer complies with requirements in the Contract Documents. Base reports on

evaluation of tests performed by manufacturer and witnessed by a qualified testing agency, or on comprehensive tests performed by a qualified testing agency.

I. Research/Evaluation Reports: Prepare written evidence, from a model code organization acceptable to authorities having jurisdiction, that product complies with building code in effect for Project.

J. Preconstruction Test Reports: Prepare reports written by a qualified testing agency, on testing agency's standard form, indicating and interpreting results of tests performed before installation of product, for compliance with performance requirements in the Contract Documents.

K. Compatibility Test Reports: Prepare reports written by a qualified testing agency, on testing agency's standard form, indicating and interpreting results of compatibility tests performed before installation of product. Include written recommendations for primers and substrate preparation needed for adhesion.

L. Field Test Reports: Prepare reports written by a qualified testing agency, on testing agency's standard form, indicating and interpreting results of field tests performed either during installation of product or after product is installed in its final location, for compliance with requirements in the Contract Documents.

M. Design Data: Prepare written and graphic information, including, but not limited to, performance and design criteria, list of applicable codes and regulations, and calculations. Include list of assumptions and other performance and design criteria and a summary of loads. Include load diagrams if applicable. Provide name and version of software, if any, used for calculations. Include page numbers.

N. Insurance Certificates and Bonds: Prepare written information indicating current status of insurance or bonding coverage. Include name of entity covered by insurance or bond, limits of coverage, amounts of deductibles, if any, and term of the coverage.

O. Material Safety Data Sheets (MSDSs): Submit information directly to Owner; do not submit to Engineer.

1. Engineer will not review submittals that include MSDSs and will return the entire submittal for resubmittal.

PART 3 - EXECUTION

3.1 CONTRACTOR'S REVIEW

A. Review each submittal and check for coordination with other Work of the Contract and for compliance with the Contract Documents. Note corrections and field dimensions. Mark with approval stamp before submitting to Architect.

B. Approval Stamp: Stamp each submittal with a uniform, approval stamp. Include Project name and location, submittal number, Specification Section title and number, name of reviewer, date of Contractor's approval, and statement certifying that submittal has been reviewed, checked, and approved for compliance with the Contract Documents.

3.2 ENGINEER'S ACTION

A. General: Engineer will not review submittals that do not bear Contractor's approval stamp and will return them without action.

B. Action Submittals: Engineer will review each submittal, make marks to indicate corrections or modifications required, and return it. Engineer will stamp each submittal with an action stamp and will mark stamp appropriately to indicate action taken.

C. Informational Submittals: Engineer will review each submittal and will not return it, or will return it if it does not comply with requirements. Engineer will forward each submittal to appropriate party.

D. Partial submittals are not acceptable, will be considered nonresponsive, and will be returned without review.

E. Submittals not required by the Contract Documents may not be reviewed and may be discarded.

END OF SECTION 01330

SECTION 01400 - QUALITY REQUIREMENTS

PART 1 - GENERAL

1.1 SUMMARY

A. This Section includes administrative and procedural requirements for quality assurance and quality control.

B. Testing and inspecting services are required to verify compliance with requirements specified or indicated. These services do not relieve Contractor of responsibility for compliance with the Contract Document requirements.

1. Specified tests, inspections, and related actions do not limit Contractor's other quality-assurance and -control procedures that facilitate compliance with the Contract Document requirements.
2. Requirements for Contractor to provide quality-assurance and -control services required by Architect, Owner, or authorities having jurisdiction are not limited by provisions of this Section.

C. See Divisions 2 through 16 Sections for specific test and inspection requirements.

1.2 DEFINITIONS

A. Quality-Assurance Services: Activities, actions, and procedures performed before and during execution of the Work to guard against defects and deficiencies and substantiate that proposed construction will comply with requirements.

B. Quality-Control Services: Tests, inspections, procedures, and related actions during and after execution of the Work to evaluate that actual products incorporated into the Work and completed construction comply with requirements. Services do not include contract enforcement activities performed by Architect.

C. Source Quality-Control Testing: Tests and inspections that are performed at the source, i.e., plant, mill, factory, or shop.

D. Field Quality-Control Testing: Tests and inspections that are performed on-site for installation of the Work and for completed Work.

E. Testing Agency: An entity engaged to perform specific tests, inspections, or both. Testing laboratory shall mean the same as testing agency.

F. Installer/Applicator/Erector: Contractor or another entity engaged by Contractor as an employee, Subcontractor, or Sub-subcontractor, to perform a particular construction operation, including installation, erection, application, and similar operations.

1. Using a term such as "carpentry" does not imply that certain construction activities must be performed by accredited or unionized individuals of a corresponding generic name,

such as "carpenter." It also does not imply that requirements specified apply exclusively to tradespeople of the corresponding generic name.

G. Experienced: When used with an entity, "experienced" means having successfully completed a minimum of five previous projects similar in size and scope to this Project; being familiar with special requirements indicated; and having complied with requirements of authorities having jurisdiction.

1.3 CONFLICTING REQUIREMENTS

A. General: If compliance with two or more standards is specified and the standards establish different or conflicting requirements for minimum quantities or quality levels, comply with the most stringent requirement. Refer uncertainties and requirements that are different, but apparently equal, to Engineer for a decision before proceeding.

1.4 SUBMITTALS

A. Qualification Data: For testing agencies specified in "Quality Assurance" Article to demonstrate their capabilities and experience. Include proof of qualifications in the form of a recent report on the inspection of the testing agency by a recognized authority.

B. Reports: Prepare and submit certified written reports that include the following:

1. Date of issue.
2. Project title and number.
3. Name, address, and telephone number of testing agency.
4. Dates and locations of samples and tests or inspections.
5. Names of individuals making tests and inspections.
6. Description of the Work and test and inspection method.
7. Identification of product and Specification Section.
8. Complete test or inspection data.
9. Test and inspection results and an interpretation of test results.
10. Record of temperature and weather conditions at time of sample taking and testing and inspecting.
11. Comments or professional opinion on whether tested or inspected Work complies with the Contract Document requirements.
12. Name and signature of laboratory inspector.
13. Recommendations on retesting and re-inspecting.

C. Permits, Licenses, and Certificates: For Owner's records, submit copies of permits, licenses, certifications, inspection reports, releases, jurisdictional settlements, notices, receipts for fee payments, judgments, correspondence, records, and similar documents, established for compliance with standards and regulations bearing on performance of the Work.

1.5 QUALITY ASSURANCE

A. General: Qualifications paragraphs in this Article establish the minimum qualification levels required; individual Specification Sections specify additional requirements.

B. Installer Qualifications: A firm or individual experienced in installing, erecting, or assembling work similar in material, design, and extent to that indicated for this Project, whose work has resulted in construction with a record of successful in-service performance.

C. Manufacturer Qualifications: A firm experienced in manufacturing products or systems similar to those indicated for this Project and with a record of successful in-service performance, as well as sufficient production capacity to produce required units.

D. Fabricator Qualifications: A firm experienced in producing products similar to those indicated for this Project and with a record of successful in-service performance, as well as sufficient production capacity to produce required units.

E. Professional Engineer Qualifications: A professional engineer who is legally qualified to practice in jurisdiction where Project is located and who is experienced in providing engineering services of the kind indicated. Engineering services are defined as those performed for installations of the system, assembly, or product that are similar to those indicated for this Project in material, design, and extent.

F. Specialists: Certain sections of the Specifications require that specific construction activities shall be performed by entities who are recognized experts in those operations. Specialists shall satisfy qualification requirements indicated and shall be engaged for the activities indicated.

1. Requirement for specialists shall not supersede building codes and regulations governing the Work.

G. Testing Agency Qualifications: An NRTL, an NVLAP, or an independent agency with the experience and capability to conduct testing and inspecting indicated, as documented according to ASTM E 548; and with additional qualifications specified in individual Sections; and where required by authorities having jurisdiction, that is acceptable to authorities.

1. NRTL: A nationally recognized testing laboratory according to 29 CFR 1910.7.
2. NVLAP: A testing agency accredited according to NIST's National Voluntary Laboratory Accreditation Program.

H. Factory-Authorized Service Representative Qualifications: An authorized representative of manufacturer who is trained and approved by manufacturer to inspect installation of manufacturer's products that are similar in material, design, and extent to those indicated for this Project.

1.6 QUALITY CONTROL

A. Owner Responsibilities: Where quality-control services are indicated as Owner's responsibility, Owner will engage a qualified testing agency to perform these services.

1. Owner will furnish Contractor with names, addresses, and telephone numbers of testing agencies engaged and a description of types of testing and inspecting they are engaged to perform.
2. Costs for re-testing and re-inspecting construction that replaces or is necessitated by work that failed to comply with the Contract Documents will be charged to Contractor.

B. Tests and inspections not explicitly assigned to Owner are Contractor's responsibility. Unless otherwise indicated, provide quality-control services specified and those required by authorities having jurisdiction. Perform quality-control services required of Contractor by authorities having jurisdiction, whether specified or not.

1. Where services are indicated as Contractor's responsibility, engage a qualified testing agency to perform these quality-control services.

   a. Contractor shall not employ same entity engaged by Owner, unless agreed to in writing by Owner.

2. Notify testing agencies at least 24 hours in advance of time when Work that requires testing or inspecting will be performed.
3. Where quality-control services are indicated as Contractor's responsibility, submit a certified written report, in duplicate, of each quality-control service.
4. Testing and inspecting requested by Contractor and not required by the Contract Documents are Contractor's responsibility.
5. Submit additional copies of each written report directly to authorities having jurisdiction, when they so direct.

C. Re-testing/Re-inspecting: Regardless of whether original tests or inspections were Contractor's responsibility, provide quality-control services, including re-testing and re-inspecting, for construction that replaced Work that failed to comply with the Contract Documents.

D. Testing Agency Responsibilities: Cooperate with Engineer and Contractor in performance of duties. Provide qualified personnel to perform required tests and inspections.

1. Notify Architect and Contractor promptly of irregularities or deficiencies observed in the Work during performance of its services.
2. Determine the location from which test samples will be taken and in which in-situ tests are conducted.
3. Conduct and interpret tests and inspections and state in each report whether tested and inspected work complies with or deviates from requirements.
4. Submit a certified written report, in duplicate, of each test, inspection, and similar quality-control service through Contractor.
5. Do not release, revoke, alter, or increase the Contract Document requirements or approve or accept any portion of the Work.
6. Do not perform any duties of Contractor.

E. Associated Services: Cooperate with agencies performing required tests, inspections, and similar quality-control services, and provide reasonable auxiliary services as requested. Notify agency sufficiently in advance of operations to permit assignment of personnel. Provide the following:

1. Access to the Work.
2. Incidental labor and facilities necessary to facilitate tests and inspections.
3. Adequate quantities of representative samples of materials that require testing and inspecting. Assist agency in obtaining samples.
4. Facilities for storage and field curing of test samples.
5. Delivery of samples to testing agencies.

6. Preliminary design mix proposed for use for material mixes that require control by testing agency.
7. Security and protection for samples and for testing and inspecting equipment at Project site.

F. Coordination: Coordinate sequence of activities to accommodate required quality-assurance and -control services with a minimum of delay and to avoid necessity of removing and replacing construction to accommodate testing and inspecting.

1. Schedule times for tests, inspections, obtaining samples, and similar activities.

1.7 SPECIAL TESTS AND INSPECTIONS

A. Special Tests and Inspections: Owner will engage a qualified testing agency to conduct special tests and inspections required by authorities having jurisdiction as the responsibility of Owner, and as follows:

B. Special Tests and Inspections: Conducted by a qualified testing agency as required by authorities having jurisdiction, as indicated in individual Specification Sections, and as follows:

1. Verifying that manufacturer maintains detailed fabrication and quality-control procedures and reviewing the completeness and adequacy of those procedures to perform the Work.
2. Notifying Engineer and Contractor promptly of irregularities and deficiencies observed in the Work during performance of its services.
3. Submitting a certified written report of each test, inspection, and similar quality-control service to Engineer with copy to Contractor and to authorities having jurisdiction.
4. Submitting a final report of special tests and inspections at Substantial Completion, which includes a list of unresolved deficiencies.
5. Interpreting tests and inspections and stating in each report whether tested and inspected work complies with or deviates from the Contract Documents.
6. Re-testing and re-inspecting corrected work.

PART 2 - PRODUCTS (Not Used)

PART 3 - EXECUTION

3.1 REPAIR AND PROTECTION

A. General: On completion of testing, inspecting, sample taking, and similar services, repair damaged construction and restore substrates and finishes.

1. Provide materials and comply with installation requirements specified in other Specification Sections. Restore patched areas and extend restoration into adjoining areas with durable seams that are as invisible as possible.
2. Comply with the Contract Document requirements for Division 1 Section "Cutting and Patching."

B. Protect construction exposed by or for quality-control service activities.

C. Repair and protection are Contractor's responsibility, regardless of the assignment of responsibility for quality-control services.

END OF SECTION 01400

SECTION 01420 - REFERENCES

PART 1 - GENERAL

1.1 DEFINITIONS

A. General: Basic Contract definitions are included in the Conditions of the Contract.

B. "Approved": When used to convey Architect's action on Contractor's submittals, applications, and requests, "approved" is limited to Architect's duties and responsibilities as stated in the Conditions of the Contract.

C. "Directed": A command or instruction by Architect. Other terms including "requested," "authorized," "selected," "approved," "required," and "permitted" have the same meaning as "directed."

D. "Indicated": Requirements expressed by graphic representations or in written form on Drawings, in Specifications, and in other Contract Documents. Other terms including "shown," "noted," "scheduled," and "specified" have the same meaning as "indicated."

E. "Regulations": Laws, ordinances, statutes, and lawful orders issued by authorities having jurisdiction, and rules, conventions, and agreements within the construction industry that control performance of the Work.

F. "Furnish": Supply and deliver to Project site, ready for unloading, unpacking, assembly, installation, and similar operations.

G. "Install": Operations at Project site including unloading, temporarily storing, unpacking, assembling, erecting, placing, anchoring, applying, working to dimension, finishing, curing, protecting, cleaning, and similar operations.

H. "Provide": Furnish and install, complete and ready for the intended use.

I. "Project Site": Space available for performing construction activities. The extent of Project site is shown on Drawings and may or may not be identical with the description of the land on which Project is to be built.

1.2 INDUSTRY STANDARDS

A. Applicability of Standards: Unless the Contract Documents include more stringent requirements, applicable construction industry standards have the same force and effect as if bound or copied directly into the Contract Documents to the extent referenced. Such standards are made a part of the Contract Documents by reference.

B. Publication Dates: Comply with standards in effect as of date of the Contract Documents, unless otherwise indicated.

C. Copies of Standards: Each entity engaged in construction on Project should be familiar with industry standards applicable to its construction activity. Copies of applicable standards are not bound with the Contract Documents.

1. Where copies of standards are needed to perform a required construction activity, obtain copies directly from publication source.

D. Abbreviations and Acronyms for Standards and Regulations: Where abbreviations and acronyms are used in Specifications or other Contract Documents, they shall mean the recognized name of the standards and regulations in the following list.

ADAAG	Americans with Disabilities Act (ADA)
CFR	Code of Federal Regulations
CRD	Handbook for Concrete and Cement
DOD	Department of Defense Military Specifications and Standards
DSCC	Defense Supply Center Columbus (See FS)
FED-STD	Federal Standard (See FS)
FS	Federal Specification
FTMS	Federal Test Method Standard (See FS)
MIL	See MILSPEC
MS MIL	See MILSPEC
MILSPEC	Military Specification and Standards
UFAS	Uniform Federal Accessibility Standards

1.3 ABBREVIATIONS AND ACRONYMS

A. Industry Organizations: Where abbreviations and acronyms are used in Specifications or other Contract Documents, they shall mean the recognized name of the entities in the following list.

AA	Aluminum Association, Inc. (The)
AAADM	American Association of Automatic Door Manufacturers
AABC	Associated Air Balance Council
AAMA	American Architectural Manufacturers Association

AASHTO	American Association of State Highway and Transportation Officials
AATCC	American Association of Textile Chemists and Colorists (The)
ABMA	American Bearing Manufacturers Association
ACI	American Concrete Institute/ACI International
ACPA	American Concrete Pipe Association
AEIC	Association of Edison Illuminating Companies, Inc. (The)
AFPA	American Forest & Paper Association (See AF&PA)
AF&PA	American Forest & Paper Association
AGA	American Gas Association
AGC	Associated General Contractors of America (The)
AHA	American Hardboard Association
AHAM	Association of Home Appliance Manufacturers
AI	Asphalt Institute
AIA	American Institute of Architects (The)
AISC	American Institute of Steel Construction
AISI	American Iron and Steel Institute
AITC	American Institute of Timber Construction
ALCA	Associated Landscape Contractors of America
ALSC	American Lumber Standard Committee, Incorporated
AMCA	Air Movement and Control Association International, Inc.
ANSI	American National Standards Institute
AOSA	Association of Official Seed Analysts
APA	APA - The Engineered Wood Association
APA	Architectural Precast Association
API	American Petroleum Institute

ARI	Air-Conditioning & Refrigeration Institute
ARMA	Asphalt Roofing Manufacturers Association
ASCA	Architectural Spray Coaters Association
ASCE	American Society of Civil Engineers
ASHRAE	American Society of Heating, Refrigerating and Air-Conditioning Engineers
ASME	ASME International (The American Society of Mechanical Engineers International)
ASSE	American Society of Sanitary Engineering
ASTM	ASTM International (American Society for Testing and Materials International)
AWCI	AWCI International (Association of the Wall and Ceiling Industries International)
AWCMA	American Window Covering Manufacturers Association (See WCSC)
AWI	Architectural Woodwork Institute
AWPA	American Wood-Preservers' Association
AWS	American Welding Society
AWWA	American Water Works Association
BHMA	Builders Hardware Manufacturers Association
BIA	Brick Industry Association (The)
BIFMA	BIFMA International (Business and Institutional Furniture Manufacturer's Association International)
CCC	Carpet Cushion Council
CCFSS	Center for Cold-Formed Steel Structures
CDA	Copper Development Association Inc.
CEA	Canadian Electricity Association
CFFA	Chemical Fabrics & Film Association, Inc.

CGA	Compressed Gas Association
CGSB	Canadian General Standards Board
CIMA	Cellulose Insulation Manufacturers Association
CISCA	Ceilings & Interior Systems Construction Association
CISPI	Cast Iron Soil Pipe Institute
CLFMI	Chain Link Fence Manufacturers Institute
CPPA	Corrugated Polyethylene Pipe Association
CRI	Carpet & Rug Institute (The)
CRSI	Concrete Reinforcing Steel Institute
CSA	CSA International (Formerly: IAS - International Approval Services)
CSI	Construction Specifications Institute (The)
CSSB	Cedar Shake & Shingle Bureau
CTI	Cooling Technology Institute (Formerly: Cooling Tower Institute)
DHI	Door and Hardware Institute
EIA	Electronic Industries Alliance
EIMA	EIFS Industry Members Association
EJCDC	Engineers Joint Contract Documents Committee
EJMA	Expansion Joint Manufacturers Association, Inc.
ESD	ESD Association
FCI	Fluid Controls Institute
FGMA	Flat Glass Marketing Association (See GANA)
FM	Factory Mutual System (See FMG)
FMG	FM Global (Formerly: FM - Factory Mutual System)
FRSA	Florida Roofing, Sheet Metal & Air Conditioning Contractors Association, Inc.

FSA	Fluid Sealing Association
FSC	Forest Stewardship Council
GA	Gypsum Association
GANA	Glass Association of North America (Formerly: FGMA - Flat Glass Marketing Association)
GRI	Geosynthetic Research Institute
GTA	Glass Tempering Division of Glass Association of North America (See GANA)
HI	Hydraulic Institute
HI	Hydronics Institute
HMMA	Hollow Metal Manufacturers Association (See NAAMM)
HPVA	Hardwood Plywood & Veneer Association
HPW	H. P. White Laboratory, Inc.
IAS	International Approval Services (See CSA)
ICEA	Insulated Cable Engineers Association, Inc.
ICRI	International Concrete Repair Institute, Inc.
IEC	International Electrotechnical Commission
IEEE	Institute of Electrical and Electronics Engineers, Inc. (The)
IESNA	Illuminating Engineering Society of North America
IGCC	Insulating Glass Certification Council
IGMA	Insulating Glass Manufacturers Alliance (The)
ILI	Indiana Limestone Institute of America, Inc.
ISSFA	International Solid Surface Fabricators Association
ITS	Intertek Testing Services
IWS	Insect Screening Weavers Association (Now defunct)
KCMA	Kitchen Cabinet Manufacturers Association

LMA	Laminating Materials Association
LPI	Lightning Protection Institute
LSGA	Laminated Safety Glass Association (See GANA)
MBMA	Metal Building Manufacturers Association
MFMA	Maple Flooring Manufacturers Association
MFMA	Metal Framing Manufacturers Association
MH	Material Handling Industry of America (See MHIA)
MHIA	Material Handling Industry of America
MIA	Marble Institute of America
MPI	Master Painters Institute
MSS	Manufacturers Standardization Society of The Valve and Fittings Industry Inc.
NAAMM	National Association of Architectural Metal Manufacturers
NAAMM	North American Association of Mirror Manufacturers (See GANA)
NACE	NACE International (National Association of Corrosion Engineers International)
NADCA	National Air Duct Cleaners Association
NAIMA	North American Insulation Manufacturers Association (The)
NAMI	National Accreditation and Management Institute, Inc.
NBGQA	National Building Granite Quarries Association, Inc.
NCMA	National Concrete Masonry Association
NCPI	National Clay Pipe Institute
NCTA	National Cable & Telecommunications Association
NEBB	National Environmental Balancing Bureau
NECA	National Electrical Contractors Association
NeLMA	Northeastern Lumber Manufacturers' Association
NEMA	National Electrical Manufacturers Association

NETA	InterNational Electrical Testing Association
NFPA	NFPA International (National Fire Protection Association International)
NFRC	National Fenestration Rating Council
NGA	National Glass Association
NHLA	National Hardwood Lumber Association
NLGA	National Lumber Grades Authority
NOFMA	National Oak Flooring Manufacturers Association
NRCA	National Roofing Contractors Association
NRMCA	National Ready Mixed Concrete Association
NSF	NSF International (National Sanitation Foundation International)
NSSGA	National Stone, Sand & Gravel Association
NTMA	National Terrazzo and Mosaic Association, Inc.
NTRMA	National Tile Roofing Manufacturers Association (See RTI)
NWWDA	National Wood Window and Door Association (See WDMA)
OPL	Omega Point Laboratories, Inc.
PCI	Precast/Prestressed Concrete Institute
PDCA	Painting and Decorating Contractors of America
PDI	Plumbing & Drainage Institute
PGI	PVC Geomembrane Institute
RCSC	Research Council on Structural Connections
RFCI	Resilient Floor Covering Institute
RIS	Redwood Inspection Service
RTI	Roof Tile Institute (Formerly: NTRMA - National Tile Roofing Manufacturers Association)

SAE	SAE International
SDI	Steel Deck Institute
SDI	Steel Door Institute
SEFA	Scientific Equipment and Furniture Association
SGCC	Safety Glazing Certification Council
SIA	Security Industry Association
SIGMA	Sealed Insulating Glass Manufacturers Association (See IGMA)
SJI	Steel Joist Institute
SMA	Screen Manufacturers Association
SMACNA	Sheet Metal and Air Conditioning Contractors' National Association
SMPTE	Society of Motion Picture and Television Engineers
SPFA	Spray Polyurethane Foam Alliance (Formerly: SPI/SPFD - The Society of the Plastics Industry, Inc.; Spray Polyurethane Foam Division)
SPIB	Southern Pine Inspection Bureau (The)
SPI/SPFD	Society of the Plastics Industry, Inc. (The) Spray Polyurethane Foam Division (See SPFA)
SPRI	SPRI (Single Ply Roofing Institute)
SSINA	Specialty Steel Industry of North America
SSPC	SSPC: The Society for Protective Coatings
STI	Steel Tank Institute
SWI	Steel Window Institute
SWRI	Sealant, Waterproofing, & Restoration Institute
TCA	Tile Council of America, Inc.
TIA/EIA	Telecommunications Industry Association/Electronic Industries Alliance
TMS	The Masonry Society

TPI	Truss Plate Institute, Inc.
TPI	Turfgrass Producers International
UL	Underwriters Laboratories Inc.
UNI	Uni-Bell PVC Pipe Association
USITT	United States Institute for Theatre Technology, Inc.
WASTEC	Waste Equipment Technology Association
WCLIB	West Coast Lumber Inspection Bureau
WCMA	Window Covering Manufacturers Association (See WCSC)
WCSC	Window Covering Safety Council (Formerly: WCMA - Window Covering Manufacturers Association)
WDMA	Window & Door Manufacturers Association (Formerly: NWWDA - National Wood Window and Door Association)
WIC	Woodwork Institute of California
WMMPA	Wood Moulding & Millwork Producers Association
WSRCA	Western States Roofing Contractors Association
WWPA	Western Wood Products Association

B. Code Agencies: Where abbreviations and acronyms are used in Specifications or other Contract Documents, they shall mean the recognized name of the entities in the following list.

BOCA	BOCA International, Inc.
CABO	Council of American Building Officials (See ICC)
IAPMO	International Association of Plumbing and Mechanical Officials (The)
ICBO	International Conference of Building Officials
ICBO ES	ICBO Evaluation Service, Inc.
ICC	International Code Council, Inc. (Formerly: CABO - Council of American Building Officials)
SBCCI	Southern Building Code Congress International, Inc.

C. Federal Government Agencies: Where abbreviations and acronyms are used in Specifications or other Contract Documents, they shall mean the recognized name of the entities in the following list.

CE	Army Corps of Engineers
CPSC	Consumer Product Safety Commission
DOC	Department of Commerce
EPA	Environmental Protection Agency
FAA	Federal Aviation Administration
FDA	Food and Drug Administration
GSA	General Services Administration
HUD	Department of Housing and Urban Development
LBL	Lawrence Berkeley Laboratory (See LBNL)
LBNL	Lawrence Berkeley National Laboratory
NCHRP	National Cooperative Highway Research Program (See TRB)
NIST	National Institute of Standards and Technology
OSHA	Occupational Safety & Health Administration
PBS	Public Building Service (See GSA)
RUS	Rural Utilities Service (See USDA)
SD	State Department
TRB	Transportation Research Board
USDA	Department of Agriculture
USPS	Postal Service

PART 2 - PRODUCTS (Not Used)

PART 3 - EXECUTION (Not Used)

END OF SECTION 01420

SECTION 01600 - PRODUCT REQUIREMENTS

PART 1 - GENERAL

1.1 SUMMARY

A. This Section includes administrative and procedural requirements for selection of products for use in Project; product delivery, storage, and handling; manufacturers' standard warranties on products; special warranties; product substitutions; and comparable products.

B. See Division 1 Section "Closeout Procedures" for submitting warranties for Contract closeout.

C. See Divisions 2 through 16 Sections for specific requirements for warranties on products and installations specified to be warranted.

1.2 DEFINITIONS

A. Products: Items purchased for incorporating into the Work, whether purchased for Project or taken from previously purchased stock. The term "product" includes the terms "material," "equipment," "system," and terms of similar intent.

1. Named Products: Items identified by manufacturer's product name, including make or model number or other designation shown or listed in manufacturer's published product literature, that is current as of date of the Contract Documents.
2. New Products: Items that have not previously been incorporated into another project or facility. Products salvaged or recycled from other projects are not considered new products.
3. Comparable Product: Product that is demonstrated and approved through submittal process, or where indicated as a product substitution, to have the indicated qualities related to type, function, dimension, in-service performance, physical properties, appearance, and other characteristics that equal or exceed those of specified product.

B. Substitutions: Changes in products, materials, equipment, and methods of construction from those required by the Contract Documents and proposed by Contractor.

C. Basis-of-Design Product Specification: Where a specific manufacturer's product is named and accompanied by the words "basis of design," including make or model number or other designation, to establish the significant qualities related to type, function, dimension, in-service performance, physical properties, appearance, and other characteristics for purposes of evaluating comparable products of other named manufacturers.

1.3 SUBMITTALS

A. Substitution Requests: Submit three copies of each request for consideration. Identify product or fabrication or installation method to be replaced. Include Specification Section number and title and Drawing numbers and titles.

1. Substitution Request Form: Use form provided by Owner.
2. Documentation: Show compliance with requirements for substitutions and the following, as applicable:

    a. Statement indicating why specified material or product cannot be provided.
    b. Coordination information, including a list of changes or modifications needed to other parts of the Work and to construction performed by Owner and separate contractors, that will be necessary to accommodate proposed substitution.
    c. Detailed comparison of significant qualities of proposed substitution with those of the Work specified. Significant qualities may include attributes such as performance, weight, size, durability, visual effect, and specific features and requirements indicated.
    d. Product Data, including drawings and descriptions of products and fabrication and installation procedures.
    e. Samples, where applicable or requested.
    f. List of similar installations for completed projects with project names and addresses and names and addresses of architects and owners.
    g. Material test reports from a qualified testing agency indicating and interpreting test results for compliance with requirements indicated.
    h. Research/evaluation reports evidencing compliance with building code in effect for Project, from a model code organization acceptable to authorities having jurisdiction.
    i. Detailed comparison of Contractor's Construction Schedule using proposed substitution with products specified for the Work, including effect on the overall Contract Time. If specified product or method of construction cannot be provided within the Contract Time, include letter from manufacturer, on manufacturer's letterhead, stating lack of availability or delays in delivery.
    j. Cost information, including a proposal of change, if any, in the Contract Sum.
    k. Contractor's certification that proposed substitution complies with requirements in the Contract Documents and is appropriate for applications indicated.
    l. Contractor's waiver of rights to additional payment or time that may subsequently become necessary because of failure of proposed substitution to produce indicated results.

3. Engineer's Action: If necessary, Engineer will request additional information or documentation for evaluation within 7 days of receipt of a request for substitution. Engineer will notify Contractor of acceptance or rejection of proposed substitution within 15 days of receipt of request, or 7 days of receipt of additional information or documentation, whichever is later.

    a. Form of Acceptance: Change Order.
    b. Use product specified if Engineer cannot make a decision on use of a proposed substitution within time allocated.

B. Comparable Product Requests: Submit three copies of each request for consideration. Identify product or fabrication or installation method to be replaced. Include Specification Section number and title and Drawing numbers and titles.

1. Engineer's Action: If necessary, Engineer will request additional information or documentation for evaluation within one week of receipt of a comparable product request. Engineer will notify Contractor of approval or rejection of proposed comparable

product request within 15 days of receipt of request, or 7 days of receipt of additional information or documentation, whichever is later.

a. Form of Approval: As specified in Division 1 Section "Submittal Procedures."
b. Use product specified if Engineer cannot make a decision on use of a comparable product request within time allocated.

C. Basis-of-Design Product Specification Submittal: Comply with requirements in Division 1 Section "Submittal Procedures." Show compliance with requirements.

1.4 QUALITY ASSURANCE

A. Compatibility of Options: If Contractor is given option of selecting between two or more products for use on Project, product selected shall be compatible with products previously selected, even if previously selected products were also options.

1.5 PRODUCT DELIVERY, STORAGE, AND HANDLING

A. Deliver, store, and handle products using means and methods that will prevent damage, deterioration, and loss, including theft. Comply with manufacturer's written instructions.

B. Delivery and Handling:

1. Schedule delivery to minimize long-term storage at Project site and to prevent overcrowding of construction spaces.
2. Coordinate delivery with installation time to ensure minimum holding time for items that are flammable, hazardous, easily damaged, or sensitive to deterioration, theft, and other losses.
3. Deliver products to Project site in an undamaged condition in manufacturer's original sealed container or other packaging system, complete with labels and instructions for handling, storing, unpacking, protecting, and installing.
4. Inspect products on delivery to ensure compliance with the Contract Documents and to ensure that products are undamaged and properly protected.

C. Storage:

1. Store products to allow for inspection and measurement of quantity or counting of units.
2. Store materials in a manner that will not endanger Project structure.
3. Store products that are subject to damage by the elements, under cover in a weathertight enclosure above ground, with ventilation adequate to prevent condensation.
4. Store cementitious products and materials on elevated platforms.
5. Store foam plastic from exposure to sunlight, except to extent necessary for period of installation and concealment.
6. Comply with product manufacturer's written instructions for temperature, humidity, ventilation, and weather-protection requirements for storage.
7. Protect stored products from damage and liquids from freezing.

1.6 PRODUCT WARRANTIES

A. Warranties specified in other Sections shall be in addition to, and run concurrent with, other warranties required by the Contract Documents. Manufacturer's disclaimers and limitations on product warranties do not relieve Contractor of obligations under requirements of the Contract Documents.

1. Manufacturer's Warranty: Preprinted written warranty published by individual manufacturer for a particular product and specifically endorsed by manufacturer to Owner.
2. Special Warranty: Written warranty required by or incorporated into the Contract Documents, either to extend time limit provided by manufacturer's warranty or to provide more rights for Owner.

B. Special Warranties: Prepare a written document that contains appropriate terms and identification, ready for execution. Submit a draft for approval before final execution.

1. Manufacturer's Standard Form: Modified to include Project-specific information and properly executed.
2. Specified Form: When specified forms are included with the Specifications, prepare a written document using appropriate form properly executed.
3. Refer to Divisions 2 through 16 Sections for specific content requirements and particular requirements for submitting special warranties.

C. Submittal Time: Comply with requirements in Division 1 Section "Closeout Procedures."

PART 2 - PRODUCTS

2.1 PRODUCT SELECTION PROCEDURES

A. General Product Requirements: Provide products that comply with the Contract Documents, that are undamaged and, unless otherwise indicated, that are new at time of installation.

1. Provide products complete with accessories, trim, finish, fasteners, and other items needed for a complete installation and indicated use and effect.
2. Standard Products: If available, and unless custom products or nonstandard options are specified, provide standard products of types that have been produced and used successfully in similar situations on other projects.
3. Owner reserves the right to limit selection to products with warranties not in conflict with requirements of the Contract Documents.
4. Where products are accompanied by the term "as selected," Engineer will make selection.
5. Where products are accompanied by the term "match sample," sample to be matched is Engineer's.
6. Descriptive, performance, and reference standard requirements in the Specifications establish "salient characteristics" of products.

B. Product Selection Procedures:

1. Product: Where Specifications name a single product and manufacturer, provide the named product that complies with requirements.
2. Manufacturer/Source: Where Specifications name a single manufacturer or source, provide a product by the named manufacturer or source that complies with requirements.
3. Products: Where Specifications include a list of names of both products and manufacturers, provide one of the products listed that complies with requirements.
4. Manufacturers: Where Specifications include a list of manufacturers' names, provide a product by one of the manufacturers listed that complies with requirements.
5. Available Products: Where Specifications include a list of names of both products and manufacturers, provide one of the products listed, or an unnamed product, that complies with requirements. Comply with provisions in Part 2 "Comparable Products" Article for consideration of an unnamed product.
6. Available Manufacturers: Where Specifications include a list of manufacturers, provide a product by one of the manufacturers listed, or an unnamed manufacturer, that complies with requirements. Comply with provisions in Part 2 "Comparable Products" Article for consideration of an unnamed product.
7. Product Options: Where Specifications indicate that sizes, profiles, and dimensional requirements on Drawings are based on a specific product or system, provide the specified product or system. Comply with provisions in Part 2 "Product Substitutions" Article for consideration of an unnamed product or system.
8. Basis-of-Design Product: Where Specifications name a product and include a list of manufacturers, provide the specified product or a comparable product by one of the other named manufacturers. Drawings and Specifications indicate sizes, profiles, dimensions, and other characteristics that are based on the product named. Comply with provisions in Part 2 "Comparable Products" Article for consideration of an unnamed product by the other named manufacturers.
9. Visual Matching Specification: Where Specifications require matching an established Sample, select a product that complies with requirements and matches Architect's sample. Architect's decision will be final on whether a proposed product matches.

    a. If no product available within specified category matches and complies with other specified requirements, comply with provisions in Part 2 "Product Substitutions" Article for proposal of product.

10. Visual Selection Specification: Where Specifications include the phrase "as selected from manufacturer's colors, patterns, textures" or a similar phrase, select a product that complies with other specified requirements.

    a. Standard Range: Where Specifications include the phrase "standard range of colors, patterns, textures" or similar phrase, Architect will select color, pattern, density, or texture from manufacturer's product line that does not include premium items.
    b. Full Range: Where Specifications include the phrase "full range of colors, patterns, textures" or similar phrase, Architect will select color, pattern, density, or texture from manufacturer's product line that includes both standard and premium items.

2.2 PRODUCT SUBSTITUTIONS

A. Timing: Engineer will consider requests for substitution if received within 60 days after the Notice to Proceed. Requests received after that time may be considered or rejected at discretion of Engineer.

B. Conditions: Engineer will consider Contractor's request for substitution when the following conditions are satisfied. If the following conditions are not satisfied, Engineer will return requests without action, except to record noncompliance with these requirements:

1. Requested substitution offers Owner a substantial advantage in cost, time, energy conservation, or other considerations, after deducting additional responsibilities Owner must assume. Owner's additional responsibilities may include compensation to Engineer for redesign and evaluation services, increased cost of other construction by Owner, and similar considerations.
2. Requested substitution does not require extensive revisions to the Contract Documents.
3. Requested substitution is consistent with the Contract Documents and will produce indicated results.
4. Substitution request is fully documented and properly submitted.
5. Requested substitution will not adversely affect Contractor's Construction Schedule.
6. Requested substitution has received necessary approvals of authorities having jurisdiction.
7. Requested substitution is compatible with other portions of the Work.
8. Requested substitution has been coordinated with other portions of the Work.
9. Requested substitution provides specified warranty.

2.3 COMPARABLE PRODUCTS

A. Conditions: Engineer will consider Contractor's request for comparable product when the following conditions are satisfied. If the following conditions are not satisfied, Engineer will return requests without action, except to record noncompliance with these requirements:

1. Evidence that the proposed product does not require extensive revisions to the Contract Documents, that it is consistent with the Contract Documents and will produce the indicated results, and that it is compatible with other portions of the Work.
2. Detailed comparison of significant qualities of proposed product with those named in the Specifications. Significant qualities include attributes such as performance, weight, size, durability, visual effect, and specific features and requirements indicated.
3. Evidence that proposed product provides specified warranty.
4. List of similar installations for completed projects with project names and addresses and names and addresses of architects and owners, if requested.
5. Samples, if requested.

PART 3 - EXECUTION (Not Used)

END OF SECTION 01600

SECTION 01700 - EXECUTION REQUIREMENTS

PART 1 - GENERAL

1.1 SUMMARY

A. This Section includes general procedural requirements governing execution of the Work including, but not limited to, the following:

1. Construction layout.
2. Field engineering and surveying.
3. General installation of products.
4. Progress cleaning.
5. Starting and adjusting.
6. Protection of installed construction.
7. Correction of the Work.

B. See Division 1 Section "Closeout Procedures" for submitting final property survey with Project Record Documents, recording of Owner-accepted deviations from indicated lines and levels, and final cleaning.

1.2 SUBMITTALS

A. Landfill Receipts: Submit copy of receipts issued by a landfill facility, licensed to accept hazardous materials, for hazardous waste disposal.

PART 2 - PRODUCTS (Not Used)

PART 3 - EXECUTION

3.1 EXAMINATION

A. Existing Conditions: The existence and location of site improvements, utilities, and other construction indicated as existing are not guaranteed. Before beginning work, investigate and verify the existence and location of mechanical and electrical systems and other construction affecting the Work.

B. Acceptance of Conditions: Examine substrates, areas, and conditions, with Installer or Applicator present where indicated, for compliance with requirements for installation tolerances and other conditions affecting performance. Record observations.

1. Verify compatibility with and suitability of substrates, including compatibility with existing finishes or primers.
2. Examine roughing-in for mechanical and electrical systems to verify actual locations of connections before equipment and fixture installation.

3. Examine walls, floors, and roofs for suitable conditions where products and systems are to be installed.
4. Proceed with installation only after unsatisfactory conditions have been corrected. Proceeding with the Work indicates acceptance of surfaces and conditions.

3.2 PREPARATION

A. Field Measurements: Take field measurements as required to fit the Work properly. Recheck measurements before installing each product. Where portions of the Work are indicated to fit to other construction, verify dimensions of other construction by field measurements before fabrication. Coordinate fabrication schedule with construction progress to avoid delaying the Work.

B. Review of Contract Documents and Field Conditions: Immediately on discovery of the need for clarification of the Contract Documents, submit a request for information to Engineer. Include a detailed description of problem encountered, together with recommendations for changing the Contract Documents.

3.3 CONSTRUCTION LAYOUT

A. Verification: Before proceeding to lay out the Work, verify layout information shown on Drawings. If discrepancies are discovered, notify Architect promptly.

B. General:

1. Establish control points to set lines and levels as needed to locate each element of Project.
2. Establish dimensions within tolerances indicated. Do not scale Drawings to obtain required dimensions.
3. Inform installers of lines and levels to which they must comply.
4. Check the location, level and plumb, of every major element as the Work progresses.
5. Notify Engineer when deviations from required lines and levels exceed allowable tolerances.

C. Building Lines and Levels: Locate and lay out control lines and levels for structures, building foundations, column grids, and floor levels, including those required for mechanical and electrical work. Transfer survey markings and elevations for use with control lines and levels. Level foundations and piers from two or more locations.

3.4 FIELD ENGINEERING

A. Reference Points: Locate existing permanent benchmarks, control points, and similar reference points before beginning the Work. Preserve and protect permanent benchmarks and control points during construction operations.

3.5 INSTALLATION

A. General: Locate the Work and components of the Work accurately, in correct alignment and elevation, as indicated.

1. Make vertical work plumb and make horizontal work level.
2. Where space is limited, install components to maximize space available for maintenance and ease of removal for replacement.

B. Comply with manufacturer's written instructions and recommendations for installing products in applications indicated.

C. Install products at the time and under conditions that will ensure the best possible results. Maintain conditions required for product performance until Substantial Completion.

D. Conduct construction operations so no part of the Work is subjected to damaging operations or loading in excess of that expected during normal conditions of occupancy.

E. Tools and Equipment: Do not use tools or equipment that produce harmful noise levels.

F. Templates: Obtain and distribute to the parties involved templates for work specified to be factory prepared and field installed. Check Shop Drawings of other work to confirm that adequate provisions are made for locating and installing products to comply with indicated requirements.

G. Anchors and Fasteners: Provide anchors and fasteners as required to anchor each component securely in place, accurately located and aligned with other portions of the Work.

1. Mounting Heights: Where mounting heights are not indicated, mount components at heights directed by Engineer.
2. Allow for building movement, including thermal expansion and contraction.
3. Coordinate installation of anchorages. Furnish setting drawings, templates, and directions for installing anchorages, including sleeves, concrete inserts, anchor bolts, and items with integral anchors, that are to be embedded in concrete or masonry. Deliver such items to Project site in time for installation.

H. Joints: Make joints of uniform width. Where joint locations in exposed work are not indicated, arrange joints for the best visual effect. Fit exposed connections together to form hairline joints.

I. Hazardous Materials: Use products, cleaners, and installation materials that are not considered hazardous.

3.6 PROGRESS CLEANING

A. General: Clean Project site and work areas daily, including common areas. Coordinate progress cleaning for joint-use areas where more than one installer has worked. Enforce requirements strictly. Dispose of materials lawfully.

1. Comply with requirements in NFPA 241 for removal of combustible waste materials and debris.
2. Do not hold materials more than 7 days during normal weather or 3 days if the temperature is expected to rise above 80 deg F (27 deg C).
3. Containerize hazardous and unsanitary waste materials separately from other waste. Mark containers appropriately and dispose of legally, according to regulations.

B. Site: Maintain Project site free of construction waste materials and debris.

C. Work Areas: Clean areas where work is in progress to the level of cleanliness necessary for proper execution of the Work.

1. Remove liquid spills promptly.
2. Where dust would impair proper execution of the Work, broom-clean or vacuum the entire work area, as appropriate.

D. Installed Work: Keep installed work clean. Clean installed surfaces according to written instructions of manufacturer or fabricator of product installed, using only cleaning materials specifically recommended. If specific cleaning materials are not recommended, use cleaning materials that are not hazardous to health or property and that will not damage exposed surfaces.

E. Concealed Spaces: Remove debris from concealed spaces before enclosing the space.

F. Exposed Surfaces in Finished Areas: Clean exposed surfaces and protect as necessary to ensure freedom from damage and deterioration at time of Substantial Completion.

G. Waste Disposal: Burying or burning waste materials on-site will not be permitted. Washing waste materials down sewers or into waterways will not be permitted.

H. During handling and installation, clean and protect construction in progress and adjoining materials already in place. Apply protective covering where required to ensure protection from damage or deterioration at Substantial Completion.

I. Clean and provide maintenance on completed construction as frequently as necessary through the remainder of the construction period. Adjust and lubricate operable components to ensure operability without damaging effects.

J. Limiting Exposures: Supervise construction operations to assure that no part of the construction, completed or in progress, is subject to harmful, dangerous, damaging, or otherwise deleterious exposure during the construction period.

3.7 PROTECTION OF INSTALLED CONSTRUCTION

A. Provide final protection and maintain conditions that ensure installed Work is without damage or deterioration at time of Substantial Completion.

B. Comply with manufacturer's written instructions for temperature and relative humidity.

3.8 CORRECTION OF THE WORK

A. Repair or remove and replace defective construction. Restore damaged substrates and finishes.

1. Repairing includes replacing defective parts, refinishing damaged surfaces, touching up with matching materials, and properly adjusting operating equipment.

B. Restore permanent facilities used during construction to their specified condition.

C. Remove and replace damaged surfaces that are exposed to view if surfaces cannot be repaired without visible evidence of repair.

D. Repair components that do not operate properly. Remove and replace operating components that cannot be repaired.

END OF SECTION 01700

SECTION 01732 - SELECTIVE DEMOLITION

PART 1 - GENERAL

1.1 SUMMARY

A. This Section includes the following:

1. Demolition and removal of selected portions of building or structure.
2. Demolition and removal of selected site elements.
3. Salvage of existing items to be reused or recycled.

1.2 DEFINITIONS

A. Remove: Detach items from existing construction and legally dispose of them off-site, unless indicated to be removed and salvaged or removed and reinstalled.

B. Remove and Salvage: Detach items from existing construction and deliver them to Owner.

C. Remove and Reinstall: Detach items from existing construction, prepare them for reuse, and reinstall them where indicated.

D. Existing to Remain: Existing items of construction that are not to be removed and that are not otherwise indicated to be removed, removed and salvaged, or removed and reinstalled.

1.3 SUBMITTALS

A. Schedule of Selective Demolition Activities: Indicate detailed sequence of selective demolition and removal work, with starting and ending dates for each activity, and means of egress.

B. Landfill Records: Indicate receipt and acceptance of hazardous wastes by a landfill facility licensed to accept hazardous wastes.

1.4 QUALITY ASSURANCE

A. Demolition Firm Qualifications: An experienced firm that has specialized in demolition work similar in material and extent to that indicated for this Project.

B. Regulatory Requirements: Comply with governing EPA notification regulations before beginning selective demolition. Comply with hauling and disposal regulations of authorities having jurisdiction.

C. Standards: Comply with ANSI A10.6 and NFPA 241.

D. Pre-demolition Conference: Conduct conference at Project site.

1.5 PROJECT CONDITIONS

A. Conditions existing at time of inspection for bidding purpose will be maintained by Owner as far as practical.

B. Notify Engineer of discrepancies between existing conditions and Drawings before proceeding with selective demolition.

C. Hazardous Materials: It is not expected that hazardous materials will be encountered in the Work.

1. Hazardous materials will be removed by Owner before start of the Work.
2. If materials suspected of containing hazardous materials are encountered, do not disturb; immediately notify Engineer and Owner. Owner will remove hazardous materials under a separate contract.

D. Storage or sale of removed items or materials on-site is not permitted.

E. Utility Service: Maintain existing utilities indicated to remain in service and protect them against damage during selective demolition operations.

1.6 WARRANTY

A. Existing Warranties: Remove, replace, patch, and repair materials and surfaces cut or damaged during selective demolition, by methods and with materials so as not to void existing warranties.

PART 2 - PRODUCTS (Not Used)

PART 3 - EXECUTION

3.1 EXAMINATION

A. Verify that utilities have been disconnected and capped.

B. Survey existing conditions and correlate with requirements indicated to determine extent of selective demolition required.

C. Inventory and record the condition of items to be removed and reinstalled and items to be removed and salvaged.

D. When unanticipated mechanical, electrical, or structural elements that conflict with intended function or design are encountered, investigate and measure the nature and extent of conflict. Promptly submit a written report to Engineer.

E. Engage a professional engineer to survey condition of building to determine whether removing any element might result in structural deficiency or unplanned collapse of any portion of structure or adjacent structures during selective demolition operations.

F. Perform surveys as the Work progresses to detect hazards resulting from selective demolition activities.

3.2 UTILITY SERVICES AND MECHANICAL/ELECTRICAL SYSTEMS

A. Existing Services/Systems: Maintain services/systems indicated to remain and protect them against damage during selective demolition operations.

B. Service/System Requirements: Locate, identify, disconnect, and seal or cap off indicated utility services and mechanical/electrical systems serving areas to be selectively demolished.

1. Arrange to shut off indicated utilities with utility companies.
2. If services/systems are required to be removed, relocated, or abandoned, before proceeding with selective demolition provide temporary services/systems that bypass area of selective demolition and that maintain continuity of services/systems to other parts of building.
3. Cut off pipe or conduit in walls or partitions to be removed. Cap, valve, or plug and seal remaining portion of pipe or conduit after bypassing.

3.3 PREPARATION

A. Site Access and Temporary Controls: Conduct selective demolition and debris-removal operations to ensure minimum interference with roads, streets, walks, walkways, and other adjacent occupied and used facilities.

B. Temporary Facilities: Provide temporary barricades and other protection required to prevent injury to people and damage to adjacent buildings and facilities to remain.

C. Temporary Shoring: Provide and maintain shoring, bracing, and structural supports as required to preserve stability and prevent movement, settlement, or collapse of construction and finishes to remain, and to prevent unexpected or uncontrolled movement or collapse of construction being demolished.

3.4 SELECTIVE DEMOLITION

A. General: Demolish and remove existing construction only to the extent required by new construction and as indicated. Use methods required to complete the Work within limitations of governing regulations and as follows:

1. Neatly cut openings and holes plumb, square, and true to dimensions required. Use cutting methods least likely to damage construction to remain or adjoining construction. Use hand tools or small power tools designed for sawing or grinding, not hammering and chopping, to minimize disturbance of adjacent surfaces. Temporarily cover openings to remain.
2. Cut or drill from the exposed or finished side into concealed surfaces to avoid marring existing finished surfaces.
3. Do not use cutting torches until work area is cleared of flammable materials. At concealed spaces, such as duct and pipe interiors, verify condition and contents of hidden

space before starting flame-cutting operations. Maintain portable fire-suppression devices during flame-cutting operations.

4. Locate selective demolition equipment and remove debris and materials so as not to impose excessive loads on supporting walls, floors, or framing.
5. Dispose of demolished items and materials promptly.

B. Reuse of Building Elements: Do not demolish building elements beyond what is indicated on Drawings without Engineer's approval.

C. Removed and Salvaged Items:

1. Clean salvaged items.
2. Pack or crate items after cleaning. Identify contents of containers.
3. Store items in a secure area until delivery to Owner.
4. Transport items to Owner's storage area designated by Owner.
5. Protect items from damage during transport and storage.

D. Removed and Reinstalled Items:

1. Clean and repair items to functional condition adequate for intended reuse. Paint equipment to match new equipment.
2. Pack or crate items after cleaning and repairing. Identify contents of containers.
3. Protect items from damage during transport and storage.
4. Reinstall items in locations indicated. Comply with installation requirements for new materials and equipment. Provide connections, supports, and miscellaneous materials necessary to make item functional for use indicated.

E. Existing Items to Remain: Protect construction indicated to remain against damage and soiling during selective demolition. When permitted by Architect, items may be removed to a suitable, protected storage location during selective demolition and reinstalled in their original locations after selective demolition operations are complete.

3.5 DISPOSAL OF DEMOLISHED MATERIALS

A. General: Except for items or materials indicated to be reused, salvaged, reinstalled, or otherwise indicated to remain Owner's property, remove demolished materials from Project site and legally dispose of them in an EPA-approved landfill.

B. Burning: Do not burn demolished materials.

C. Disposal: Transport demolished materials off Owner's property and legally dispose of them.

3.6 CLEANING

A. Clean adjacent structures and improvements of dust, dirt, and debris caused by selective demolition operations. Return adjacent areas to condition existing before selective demolition operations began.

END OF SECTION 01732

SECTION 01770 - CLOSEOUT PROCEDURES

PART 1 - GENERAL

1.1 SUMMARY

A. This Section includes administrative and procedural requirements for contract closeout, including, but not limited to, the following:

1. Inspection procedures.
2. Warranties.
3. Final cleaning.

B. See Division 1 Section "Payment Procedures" for requirements for Applications for Payment for Substantial and Final Completion.

C. See Divisions 2 through 16 Sections for specific closeout and special cleaning requirements for the Work in those Sections.

1.2 SUBSTANTIAL COMPLETION

A. Preliminary Procedures: Before requesting inspection for determining date of Substantial Completion, complete the following. List items below that are incomplete in request.

1. Prepare a list of items to be completed and corrected (punch list), the value of items on the list, and reasons why the Work is not complete.
2. Advise Owner of pending insurance changeover requirements.
3. Submit specific warranties, workmanship bonds, maintenance service agreements, final certifications, and similar documents.
4. Obtain and submit releases permitting Owner unrestricted use of the Work and access to services and utilities. Include occupancy permits, operating certificates, and similar releases.
5. Prepare and submit Project Record Documents and similar final record information.
6. Deliver tools, spare parts, extra materials, and similar items to location designated by Owner. Label with manufacturer's name and model number where applicable.
7. Make final changeover of permanent locks and deliver keys to Owner. Advise Owner's personnel of changeover in security provisions.
8. Terminate and remove temporary facilities from Project site construction tools, and similar elements.
9. Submit changeover information related to Owner's occupancy, use, operation, and maintenance.
10. Complete final cleaning requirements, including touchup painting.
11. Touch up and otherwise repair and restore marred exposed finishes to eliminate visual defects.

B. Inspection: Submit a written request for inspection for Substantial Completion. On receipt of request, Engineer will either proceed with inspection or notify Contractor of unfulfilled

requirements. Engineer will prepare the Certificate of Substantial Completion after inspection or will notify Contractor of items, either on Contractor's list or additional items identified by Engineer, that must be completed or corrected before certificate will be issued.

1. Re-inspection: Request re-inspection when the Work identified in previous inspections as incomplete is completed or corrected.
2. Results of completed inspection will form the basis of requirements for Final Completion.

1.3 FINAL COMPLETION

A. Preliminary Procedures: Before requesting final inspection for determining date of Final Completion, complete the following:

1. Submit a final Application for Payment according to Division 1 Section "Payment Procedures."
2. Submit certified copy of Engineer's Substantial Completion inspection list of items to be completed or corrected (punch list), endorsed and dated by Engineer. The certified copy of the list shall state that each item has been completed or otherwise resolved for acceptance.
3. Submit evidence of final, continuing insurance coverage complying with insurance requirements.

B. Inspection: Submit a written request for final inspection for acceptance. On receipt of request, Engineer will either proceed with inspection or notify Contractor of unfulfilled requirements. Engineer will prepare a final Certificate for Payment after inspection or will notify Contractor of construction that must be completed or corrected before certificate will be issued.

1. Re-inspection: Request re-inspection when the Work identified in previous inspections as incomplete is completed or corrected.

1.4 LIST OF INCOMPLETE ITEMS (PUNCH LIST)

A. Preparation: Submit three copies of list. Include name and identification of each space and area affected by construction operations for incomplete items and items needing correction including, if necessary, areas disturbed by Contractor that are outside the limits of construction.

1.5 WARRANTIES

A. Submittal Time: Submit written warranties on request of Engineer for designated portions of the Work where commencement of warranties other than date of Substantial Completion is indicated.

B. Organize warranty documents into an orderly sequence based on the table of contents of the Project Manual.

1. Bind warranties and bonds in heavy-duty, 3-ring, vinyl-covered, loose-leaf binders, thickness as necessary to accommodate contents, and sized to receive 8-1/2-by-11-inch (215-by-280-mm) paper.
2. Identify each binder on the front and spine with the typed or printed title "WARRANTIES," Project name, and name of Contractor.

PART 2 - PRODUCTS

2.1 MATERIALS

A. Cleaning Agents: Use cleaning materials and agents recommended by manufacturer or fabricator of the surface to be cleaned. Do not use cleaning agents that are potentially hazardous to health or property or that might damage finished surfaces.

PART 3 - EXECUTION

3.1 FINAL CLEANING

A. General: Provide final cleaning. Conduct cleaning and waste-removal operations to comply with local laws and ordinances and Federal and local environmental and antipollution regulations.

B. Cleaning: Employ experienced workers for final cleaning. Clean each surface to condition expected in an average transfer station building cleaning and maintenance program. Comply with manufacturer's written instructions.

1. Complete the following cleaning operations before requesting inspection for certification of Substantial Completion for entire Project:

   a. Clean Project site, yard, and grounds, in areas disturbed by construction activities, including landscape development areas, of rubbish, waste material, litter, and other foreign substances.
   b. Sweep paved areas broom clean. Remove petrochemical spills, stains, and other foreign deposits.
   c. Rake grounds that are neither planted nor paved to a smooth, even-textured surface.
   d. Remove tools, construction equipment, machinery, and surplus material from Project site.
   e. Remove snow and ice to provide safe access to building.
   f. Clean exposed exterior and interior hard-surfaced finishes to a dirt-free condition, free of stains, films, and similar foreign substances. Avoid disturbing natural weathering of exterior surfaces. Restore reflective surfaces to their original condition.
   g. Sweep concrete floors broom clean in unoccupied spaces.
   h. Remove labels that are not permanent.

i. Touch up and otherwise repair and restore marred, exposed finishes and surfaces. Replace finishes and surfaces that cannot be satisfactorily repaired or restored or that already show evidence of repair or restoration.

1) Do not paint over "UL" and similar labels, including mechanical and electrical nameplates.

j. Leave Project clean and ready for occupancy.

C. Comply with safety standards for cleaning. Do not burn waste materials. Do not bury debris or excess materials on Owner's property. Do not discharge volatile, harmful, or dangerous materials into drainage systems. Remove waste materials from Project site and dispose of lawfully.

END OF SECTION 01770

SECTION 09900 - PAINTING AND PROTECTIVE COATINGS

PART 1 - GENERAL

1.1 SCOPE

Requirements of Conditions of Contract and Division 1 apply to this Section. Provide all labor, materials, apparatus, scaffolding, and all appurtenant work in connection with painting and protective coatings, complete as indicated, specified and required.

A. Work Included in This Section. Principal items include:

1. Structural and miscellaneous steel.
2. The Contractor shall furnish to the Owner, at no charge for use during this project, the necessary dry film thickness gages and electrical flaw or holiday detection equipment.

B. Related Work Not Included in This Section. The following surfaces, in general, shall not be painted:

1. Concrete surfaces subject to pedestrian or vehicular traffic except as herein specified.
2. Plastic surfaces and fiberglass reinforced plastic (FRP) surfaces, except as specified for identification purposes.
3. Nonferrous metals and stainless steel unless otherwise noted or indicated. Galvanized metal shall not be coated unless specified otherwise.
4. Mechanical equipment with factory finish as specified herein.
5. Electrical and instrumentation equipment with approved factory finish as indicated herein.
6. Waterproofing, damp proofing and roof covering Work.
7. Pavement striping and marking as specified elsewhere in these Specifications.
8. Existing painted surfaces which are not within areas of alterations performed under this General Contract unless such surfaces are damaged in performance of Work of this General Contract.

1.2 GUARANTEE

A two (2) year guarantee which commences on the date of acceptance against failure of all coatings shall be provided. Failure of any coating during the guarantee period shall be repaired by the Contractor who shall absorb all costs related to the repair of the coating.

1.3 As part of this two (2) year guarantee, the Contractor shall perform an inspection of all painted surfaces at 11 months from date of acceptance with an Owner's representative. C oating failures shall be repaired. The costs of this inspection and any repair services shall be the Contractor's responsibility.

1.4 REFERENCE SPECIFICATIONS AND STANDARDS

A. Without limiting the generality of other requirements of these Specifications, all cleaning, surface preparation, and coating shall conform to the applicable requirements of the referenced portions of the standards specified herein to the extent that the requirements therein specified are not in conflict with the provisions of this Section.

B. Unless otherwise specified, all work and materials for the preparation and coating of all metal surfaces shall conform to the applicable requirements specified in the Steel Structures Painting Manual, Volume 2, Systems and Specifications, latest edition, published by the Steel Structures Painting Council.

C. The following referenced surface preparation specifications of the Steel Structures Painting Council shall form a part of this Section.

1. Near-White Blast Cleaning (SSPC-SPI0-63T). Blast cleaning nearly to White Metal Cleanliness, until at least 95 percent of each element of surface area is free of all visible residues. (For high humidity, chemical atmosphere, marine or other corrosive environment).

D. Quality Assurance. Evaluation of surface preparation for ferrous metals will be based upon SSPC-Vis I ASTM Designation D220 and "Standard Methods of Evaluating Degree of Rusting on Painted Steel Surfaces", SSPC-Vis 2 ASTM Designation D 610.

1. To facilitate inspection, the Contractor shall, on the first day of sandblasting operations, sandblast metal panels to the degree called for in the Specification and as noted above. After mutually agreeing that a specific panel meets the requirements of the Specification, the panel shall be initialed by the Contractor and Inspector and then be coated with a clear, non-yellowing finish. Panels shall be prepared for each type sandblasting specified and shall be maintained and utilized by the Inspector throughout the duration of sandblasting operations.

1.5 COMPLIANCE WITH ENVIRONMENTAL REGULATORY REQUIREMENTS

A. Contractor shall comply with all current federal, state, and local environmental laws and regulations, including, but not limited to the laws and regulations of the U.S. Environmental Protection Agency (USEPA).

1.6 SUBMITTALS

A. Samples

1. For compliance with these Specifications, the Contractor shall prepare and submit one (1) paint and protective coating samples of each finish, including all coats thereof, to the Owner for review, as specified in Section 01300, "Submittals". The samples shall be clearly marked with the manufacturer's name and product identification, and shall be submitted in sufficient time to allow for review, and, if necessary, resubmittal without causing any delay of the Project.
2. The Contractor, at the beginning of the Project, shall furnish one sq. ft. steel panels to be sandblasted in accordance with the sandblasting specifications and to be coated with a non-yellowing shellac, to be used as the standard for preparation of steel surfaces for the duration of this Project.

B. Coating Materials List

1. The Contractor shall provide three (3) copies of a paint and coating materials list which indicates the manufacturer and paint number, keyed to the coating schedule herein, for approval of the Owner prior to, or at the time of, submittal of samples required herein.
2. The Contractor shall include with his submittal his protective coating schedule for field coatings of items to receive protection. The schedule shall conform to the specified requirements for surface preparation, priming, and coating for items covered, and shall follow the same requirements for similar work where such work has not been specifically called-out. No bare ferrous non-working surfaces shall be omitted from the schedule. Particular care shall be taken to cover in sufficient detail the coating of mechanical joints and other mechanical devices, which shall conform to the recommended practice of the manufacturer of the joint or other mechanical devices.
3. Submittals shall be sufficiently early to permit Owner's review and then Contractor's coordination with affected material and equipment suppliers.

C. Product Data Sheets and Material Safety Data Sheets. Contractor shall submit paint and coatings material manufacturers' printed technical data sheets for products intended for use in each of various paint and coating systems. Data sheets shall fully describe material as to its intended use, make-up, recommended surface preparation and application conditions, primers, material mixing and application (including recommended dry mil thickness), precautions, safety and maintenance cleaning directions.

1.7 PROTECTION OF WORK

The Contractor shall be responsible for any and all damage to his Work or the work of others during the time his Work is in progress.

1.8 RIGHT OF REJECTION

The Owner shall have the right to reject all material or Work that is unsatisfactory, and require the replacement of either or both at the expense of the Contractor.

1.9 JOB CONFERENCE

Prior to commencing Work, a pre-job conference shall be held for the purpose of reviewing and clarifying the painting and coating requirements of the Project.

The Owner, Contractor, Applicator, Coatings and Paint Manufacturers, and the Inspector shall be present. A schedule of work to be accomplished will be established.

PART 2 -PRODUCTS

2.1 GENERAL

Surfaces to receive paint protective coating materials as herein specified in this Section shall be coated in conformance with the applicable coating systems specified herein. All materials specified by name and/or

manufacturer or selected for use under these Specifications, shall be delivered unopened at the job site in their original containers and shall not be opened until inspected by the Owner. Whenever a manufacturer's brand name is specified, it is intended to define the general type and quality of paint or coating desired. Other coatings or paints of equal quality may be used.

Coating materials shall be as specified herein or approved equal. Architectural paint finishes are specified hereinafter. All paint and coatings shall be produced and applied as herein called for, or, if not specifically called for, it shall be applied in accordance with the manufacturer's printed recommendations as reviewed by Owner. So far as possible, paint and coating materials shall be provided by a single source supplier.

2.2 PAINT AND COATING MATERIALS

A. Definitions: The term "coating materials", as used herein, shall include enamels, except galvanizing, whether used as a pretreatment, primer, intermediate coat, or finish coat.

B. General:

1. Paint and protective coating materials shall be sealed in containers that plainly show the designated name, formula or specification number, batch number, color, date of manufacture, manufacturer's directions, and name of manufacturer, all of which shall be plainly legible at the time of use. Pigmented paints shall be furnished in containers not larger than five (5) gallons. Materials shall conform to the specifications shown herein and to the requirements hereinafter specified.
2. Products shall be standard for recognized manufacturer engaged in production of such materials for essentially identical or similar applications in the water and wastewater treatment industry and industrial plants.

C. Compatibility. Only compatible materials shall be used in the Work. Particular attention shall be directed to compatibility of primers and finish coats. If necessary, subject to review of the Owner, a compatible barrier coat shall be applied between all existing prime coats and subsequent field coats to ensure compatibility.

D. Colors. Colors and shades of colors of coats of paints and protective coating material shall be as selected by the Owner. Each coat shall be of a slightly different shade, as directed by the Owner, to facilitate inspection of surface coverage of each coat.

2.3 SERVICE CONDITION “A”

Ferrous metals, other than stainless steel, submerged or intermittently submerged in water, sludge, sewage, chemical mixtures or similar corrosive liquid and steel angles in contact with concrete shall be prepared and coated in accordance with the following requirements. The “hopper” is to be left un-painted.

A. Surface Preparation. Metal surfaces, except the hopper, shall be field sandblasted in accordance with Steel Structures Painting Council Specification SSPC-SPIO (Near White Blast Cleaning). An anchor profile of not less than 2 mils, as determined by a profile comparator, shall be attained. Weld surface, edges, and sharp corners shall be ground to a curve, splatter removed and neutralized with thinner.

B. Application. Application shall be in strict conformance with the manufacturer's printed recommendations. S harp edges, nuts, bolts, or other items difficult to coat shall receive a

brush-applied coat of the specified coating prior to application of each coat.

C. Coating System A. Except as otherwise noted, the prime coat shall have minimum dry film thickness of 10 mils; and the final coat, 10 mils. The total system shall have a minimum dry film thickness of 20 mils.

Carboline System:	Primer -Carboguard 891 Final -Carboguard 891
Engard System:	Primer -480 H.S. Epoxy Final-480 H.S. Epoxy
Tnemec System:	Primer -69 Hi-Build Epoxoline II Final -69 Hi-Build Epoxoline II

PART 3 -EXECUTION

3.1 MANUFACTURER'S RECOMMENDATIONS

Unless otherwise specified herein, the paint and coating manufacturer's printed recommendations and instructions for thinning, mixing, handling, applying, and protection of his coating materials; for preparation of surfaces for coating; and for all other procedures relative to coating shall be strictly observed. No substitutions or other deviations shall be permitted without written permission of the Owner.

3.2 DELIVERY AND STORAGE

Materials shall be delivered in manufacturer's original, sealed containers, with labels and tags intact. Coating materials and equipment shall be stored in designated areas. Coating containers shall be opened only when required for use. Coatings shall be mixed only in designated rooms or spaces in the presence of the

Owner's Representative. Coating shall be thoroughly stirred or agitated to uniformly smooth consistency and prepared and handled in a manner to prevent deterioration and inclusion of foreign matter. Unless otherwise specified or reviewed, no materials shall be reduced, changed, or used except in accordance with the manufacturer's label or tag on container.

3.3 SAFETY REQUIREMENTS

In accordance with the requirements of the latest applicable OSHA Regulations for Construction, the Contractor shall provide and require the use of personal protective lifesaving equipment for all persons working in or about the Project site.

A. Protective Equipment. Respirators shall be worn by all persons engaged in, and assisting in, spray painting. In addition, workers engaged in or near the Work during sandblasting shall wear eye and face protection devices meeting the requirements of ANSI ZB7.l latest revision, and approved OSHA Regulations for sandblasting operations and approved air-purifying, half-mask or mouthpiece respirator with appropriate filter.

B. Ventilation. Where ventilation is used to control potential exposure to workers as set forth in

Section 1910.94 of the OSHA Regulations for Construction, ventilation shall be adequate to reduce the concentration of the air contaminant to the degree that a hazard to the worker does not exist. Methods of ventilation shall meet the requirements set forth in ANSI Z9.2, latest revision.

C. Sound Levels. Whenever the occupational noise exposure exceeds the maximum allowable sound levels as set forth in Table 0-2, Permissible Noise Exposures, in Section 1926.52, of the OSHA Regulations for Construction, ear protective devices shall be furnished and used. Ear protective devices inserted in the ear shall be fitted or determined individually, by competent persons. Plain cotton is not an acceptable protective device.

D. Storage and mixing of coating materials shall be performed only in those areas designated by the Owner.

E. Cloths and cotton waste that might constitute a fire hazard shall be placed in closed metal containers or destroyed at the end of each work day.

3.4 STORAGE, MIXING, AND THINNING

Paint and coating materials shall be protected from exposure to cold weather, and shall be thoroughly stirred, strained, and kept at a uniform consistency during application. Materials of different manufacturers shall not be mixed together. Packaged materials may be thinned immediately prior to application in accordance with the manufacturer's directions.

3.5 WORKMANSHIP

A. Skilled craftsmen and experienced supervision shall be used on all Work.

B. All paint and coatings shall be applied in a workmanlike manner so as to produce an even film of specified uniform thickness. Edges, corners, crevices, and joints shall receive special attention to ensure that they have been thoroughly cleaned and that they receive an adequate thickness of paint. The finished surfaces shall be free from runs, drops, ridges, waves, laps, brush marks, and variations in color, texture, and finish. The hiding shall be so complete that the addition of another coat of paint would not increase the hiding. All coats shall be applied so as to produce a film of uniform thickness. Special attention shall be given to ensure that edges, corners, crevices, welds, and similar areas receive a film thickness equivalent to adjacent areas, and installations shall be protected by the use of drop cloths or other approved precautionary measures. Rough exterior cement plaster shall be spray painted.

3.6 PREPARATION FOR PAINTING AND PROTECTIVE COATING

Surfaces to receive paint and protective coatings shall be cleaned as specified herein prior to application of coating materials. The Contractor shall examine all surfaces to be coated, and shall correct all surface defects before application of any coating material. Beginning the Work of this Section without reporting unsuitable conditions to the Owner constitutes acceptance of conditions by the Contractor. Any required removal, repair, or replacement of the Work caused by unsuitable conditions shall be done at no additional cost to the Owner. Marred or abraded spots on shop-primed and factory-finished surfaces shall receive touch-up restoration prior to any other coating application.

3.7 ITEMS NOT TO BE COATED

Hardware, hardware accessories, nameplate data tags, machined surfaces and similar items in contact with coated surfaces not to be coated shall be removed or masked prior to surface preparation and painting operations. Following completion of coating of each piece, removed items shall be reinstalled. Such removal and installation shall be done by workmen skilled in the trades involved.

3.8 SANDBLASTING

A. Sandblasting shall be done in strict accordance with the referenced specifications of the Steel Structures Painting Council.

B. When items are to be shop primed or shop primed and finish coated in the shop, surface preparation shall be as specified in this Section. The Owner shall have the right to witness, inspect, and reject any sandblasting done in the shop.

C. When sandblasting is done in the field, care shall be taken to prevent damage to structures and equipment. Pumps, motors, and other equipment shall be shielded, covered, or otherwise protected to prevent the entrance of sand. No sandblasting may begin before the Owner inspects and reviews the protective measures.

D. After sandblasting, dust and spent sand shall be removed from the surfaces by brushing or vacuum cleaning.

3.9 APPLICATION OF PROTECTIVE COATINGS

A. Shop Coating. Fabricated metalwork and equipment which requires coating may be shop primed before fabrication with specified primer. Such work delivered to the job site with any other shop coat shall have this coating removed and the specified coating applied in the field. Manufactured equipment with approved corrosion resistant factory finishes and galvanized finishes shall be exempt from this requirement.

B. Application of Field Coatings

1. Except where in conflict with the manufacturer's printed instructions, or where otherwise specified herein, the Contractor may use brush, roller, air spray, or so-called airless spray application; however, spray painting must first have the approval of the Owner. Rollers for applying enamel shall have a short nap. Areas inaccessible to spray coating or rolling shall be coated by brushing or other suitable means.
2. The Contractor shall give special attention to the Work to ensure that edges, corners, crevices, welds, bolts, and other areas, as determined by the Owner, receive a film thickness at least equivalent to that of adjacent coated surfaces.
3. Protective coating materials shall be applied in strict accordance with the manufacturer's printed instructions.
4. Prime coat shall be applied to clean surfaces within a four hour period of the cleaning, and prior to deterioration or oxidation of the surface, and in accordance with the manufacturer's recommendations. Drift from sandblasting procedures shall not be allowed to settle on freshly painted surfaces.
5. Coatings shall be applied in dry and dust-free environment, and unless otherwise

directed by the Owner, shall not be applied when the air temperature or the temperature of the surface to be painted is outside the range of 50 degrees F to 90 degrees F.

6. Each coat shall be applied evenly, at the proper consistency, and free of brush marks, sags, runs, and other evidence of poor workmanship. Care shall be exercised to avoid lapping paint on glass or hardware. Coatings shall be sharply cut to lines. Finished coated surfaces shall be free from defects or blemishes. Protective coverings shall be used to protect floors, fixtures, and equipment. Care shall be exercised to prevent paint from being spattered onto surfaces from which such paint cannot be removed satisfactorily. Surfaces from which paint cannot be removed satisfactorily shall be painted or repainted as required to produce a finish satisfactory to the Owner. Whenever two (2) coats of a dark colored paint are specified, the first coat shall contain sufficient powdered aluminum to act as an indicator of proper coverage, or the two (2) coatings shall be of a Contrasting color.
7. Interior surfaces of roof plates, roof rafters, and supports, and contact surfaces inaccessible after assembly, shall be coated before erection; however, no structural friction connections or high tensile bolts and nuts shall be painted before erection. Areas damaged during erection shall be hand or power-tool cleaned and recoated with prime coat.
8. Touch-up of surfaces shall be performed after installation.
9. Surfaces to be coated shall be clean and dry at the time of application.

C. Time of Coating

1. Sufficient time shall be allowed to elapse between successive coats to permit satisfactory recoating, but, once commenced; the entire coating operation shall be completed without delay. No additional coating of any structure, equipment, or other item designated to be painted shall be undertaken without specific permission of the Owner until the previous coating has been completed for the entire structure, piece of equipment, or other item.

D. Thickness of Coating

The dry film mil-thickness specified shall be achieved and verified for each coat.

3.10 TESTING AND INSPECTION

A. Inspection Devices - The Contractor shall furnish, until final acceptance of coating and painting, inspection devices in good working condition for detection of holidays and measurement of dry-film thickness of coatings and paints. The Contractor shall also furnish U.S. Department of Commerce; National Bureau of Standards certified thickness calibration plates to test the accuracy of dry-film thickness gauge and certified instrumentation to test accuracy. Dry-film thickness gauges shall be made available for the Inspector's use at all times until final acceptance of application. Holiday detection devices shall be operated in the presence of the Inspector. Inspection devices shall be operated in accordance with the manufacturer's instructions at the direction of the Owner or the Owner's Representative.

B. The Contractor shall conduct film thickness measurements and electrical inspection of the coated surfaces with equipment furnished by him and shall recoat and repair as necessary for compliance with the Specifications.

C. After repaired and recoated ferrous metals areas have cured, final inspection tests will be conducted by the Owner or the Owner's Representative. Coating thicknesses specified in mils on ferrous substrates will be measured with a nondestructive magnetic type dry-film thickness gauge such as the Elcometer, manufactured by Gardner Laboratories, Inc. Discontinuities, voids and pinholes in the coatings will be determined with a nondestructive type electrical holiday detector. Epoxy coatings and other thin film coatings will be checked for discontinuities and voids with a low voltage detector of the wet-sponge type, such as Model MI as manufactured by Tinker and Rasor. Use a non-sudsing type wetting agent, such as Kodak Photo-Flo, which shall be added to the water prior to wetting the sponge. P inholes shall be marked, repaired in accordance with the manufacturer's printed recommendations and retested. No pinholes or other irregularities will be permitted. Wide film thickness discrepancies shall be measured and verified with a micrometer or other approved measuring instrument. Coatings not in compliance with the Specifications will not be acceptable and shall be replaced and re-inspected at Contractor's expense until the Specifications are met.

D. Warranty Inspection. Warranty inspection shall be conducted during the eleventh month following completion of all coating and painting Work. Personnel present at the Pre-Job Conference shall attend this inspection. Defective Work shall be repaired in accordance with this Specification and to the satisfaction of the Owner or his appointed representative.

3.11 CLEANUP

A. Upon completion of the Work, staging, scaffolding, and containers shall be removed from the site or destroyed in an approved manner. Paint spots, oil, or stains upon adjacent surfaces shall be removed.

B. The Contractor shall clean the site in accordance with the requirements for "Cleaning Up" in the General Conditions.

END OF SECTION 09900

SECTION 13125 - METAL BUILDING SYSTEMS

PART 1 - GENERAL

1.1 SUMMARY

A. This Section includes metal building systems that consist of integrated sets of mutually dependent components including structural framing, roof panels, wall panels and accessories.

B. See Division 3 Section "Cast-in-Place Concrete" for concrete foundations, slabs, and anchor-bolt installation.

1.2 SYSTEM PERFORMANCE REQUIREMENTS

A. Structural Performance: Provide metal building systems capable of withstanding the effects of gravity loads and the following loads and stresses within limits and under conditions indicated:

1. Engineer metal building systems according to procedures in MBMA's "Metal Building Systems Manual."
2. Design Loads: As indicated on Drawings.
3. Design Loads: As required by ASCE 7, "Minimum Design Loads for Buildings and Other Structures."

B. Thermal Movements: Provide metal panel systems that allow for thermal movements resulting from the following maximum change (range) in ambient and surface temperatures by preventing buckling, opening of joints, overstressing of components, failure of joint sealants, failure of connections, and other detrimental effects. Base engineering calculation on surface temperatures of materials due to both solar heat gain and nighttime-sky heat loss.

C. Wind-Uplift Resistance: Provide metal roof panel assemblies that comply with UL 580 for Class 90.

1.3 SUBMITTALS

A. Product Data: For each type of metal building system component indicated.

B. Shop Drawings: Include plans, elevations, sections, details, and attachments to other work.

1. For installed products indicated to comply with design loads, include structural analysis data signed and sealed by the qualified professional engineer responsible for their preparation.
2. Metal Roof and Wall Panel Layout Drawings: Show layouts of metal panels including methods of support. Include details of edge conditions, joints, panel profiles, corners, anchorages, trim, flashings, closures, and special details. Distinguish between factory- and field-assembled work; show locations of exposed fasteners.

C. Samples: For each type of building component and for each color and texture required.

D. Welding certificates.

1.4 QUALITY ASSURANCE

A. Erector Qualifications: An experienced erector who has specialized in erecting and installing work similar in material, design, and extent to that indicated for this Project and who is acceptable to manufacturer.

B. Manufacturer Qualifications: A qualified manufacturer.

1. AISC Certification for Category MB: An AISC-Certified Manufacturer that designs and produces metal building systems and components in an AISC-Certified Facility.
2. Engineering Responsibility: Preparation of Shop Drawings and engineering analysis by a qualified professional engineer.

C. Welding: Qualify procedures and personnel according to AWS D1.1, "Structural Welding Code--Steel," and AWS D1.3, "Structural Welding Code--Sheet Steel."

D. Cold-Formed Steel: Comply with AISI's "Specification for the Design of Cold-Formed Steel Structural Members," or AISI's "Load and Resistance Factor Design Specification for Steel Structural Members," for design requirements and allowable stresses.

E. Pre-Erection Conference: Conduct conference at Project site to comply with requirements in Division 1 Section "Project Management and Coordination." Review methods and procedures related to metal building systems including, but not limited to, the following:

1. Inspect and discuss condition of foundations and other preparatory work performed by other trades.
2. Review structural load limitations.
3. Review required testing, inspecting, and certifying procedures.

1.5 DELIVERY, STORAGE, AND HANDLING

A. Stack metal panels horizontally on platforms or pallets, covered with suitable weathertight and ventilated covering. Store metal panels to ensure dryness and with positive slope for drainage of water. Do not store metal panels in contact with other materials that might cause staining, denting, or other surface damage.

1.6 WARRANTY

A. Special Warranty on Metal Panel Finishes: Manufacturer's standard form in which manufacturer agrees to repair finish or replace metal panels that show evidence of deterioration of factory-applied finishes within specified warranty period.

1. Siliconized Polyester Finish: Deterioration includes, but is not limited to, the following:

a. Color fading more than 15 Hunter units when tested according to ASTM D 2244.
b. Chalking in excess of a No. 2 rating when tested according to ASTM D 4214.
c. Cracking, checking, peeling, or failure of paint to adhere to bare metal.

2. Fluoropolymer Finish: Deterioration includes, but is not limited to, the following:

   a. Color fading more than 5 Hunter units when tested according to ASTM D 2244.
   b. Chalking in excess of a No. 8 rating when tested according to ASTM D 4214.
   c. Cracking, checking, peeling, or failure of paint to adhere to bare metal.

3. Finish Warranty Period: 10 years from date of Substantial Completion.

PART 2 - PRODUCTS

2.1 MANUFACTURERS

A. Available Manufacturers: Subject to compliance with requirements, manufacturers offering products that may be incorporated into the Work include, but are not limited to, the following:

B. Manufacturers: Subject to compliance with requirements, provide products by one of the following:

1. Alliance Steel, Inc.
2. American Buildings Company.
3. American Steel Building Company, Inc.; Division of NCI Building Systems, LLP.
4. Behlen Mfg. Co.
5. Butler Manufacturing Company.
6. Ceco Building Systems; Division of Robertson-Ceco Corporation.
7. Crown Metal Buildings, Inc.
8. Garco Building Systems.
9. Gulf States Manufacturers, Inc.
10. Mesco Metal Buildings; Division of NCI Building Systems, LLP.
11. Metallic Metal Building Company; Division of NCI Building Systems, LLP.
12. Package Industries, Inc.
13. Southern Structures, Inc.
14. Spirco Manufacturing; Division of Metal Building Products, Inc.
15. Star Building Systems; Division of Robertson-Ceco Corporation.
16. Steelox Systems Inc.
17. United Structures of America, Inc.
18. VP Buildings, Inc.; a United Dominion Company.

2.2 STRUCTURAL-FRAMING MATERIALS

A. W-Shapes: ASTM A 992/A 992M; ASTM A 572/A 572M, Grade 50 or 55 (345 or 380); or ASTM A 529/A 529M, Grade 50 or 55 (345 or 380).

B. Channels, Angles, M-Shapes, and S-Shapes: ASTM A 36/A 36M; ASTM A 572/A 572M, Grade 50 or 55 (345 or 380); or ASTM A 529/A 529M, Grade 50 or 55 (345 or 380).

C. Plate and Bar: ASTM A 36/A 36M; ASTM A 572/A 572M, Grade 50 or 55 (345 or 380); or ASTM A 529/A 529M, Grade 50 or 55 (345 or 380).

D. Steel Pipe: ASTM A 53/A 53M, Type E or S, Grade B.

E. Cold-Formed Hollow Structural Sections: ASTM A 500, Grade B or C, structural tubing.

F. Structural-Steel Sheet: Hot-rolled, ASTM A 1011/A 1011M, Structural Steel (SS), Grades 30 through 55 (205 through 380), or High-Strength Low Alloy Steel (HSLAS), Grades 45 through 70 (310 through 480); or cold-rolled, ASTM A 1008/A 1008M, Structural Steel (SS), Grades 25 through 80 (170 through 550), or High-Strength Low Alloy Steel (HSLAS), Grades 45 through 70 (310 through 480).

G. Metallic-Coated Steel Sheet: ASTM A 653/A 653M, Structural Steel (SS), Grades 33 through 80 (230 through 550) or High-Strength Low Alloy Steel (HSLAS), Grades 50 through 80 (340 through 550); with G60 (Z180) coating designation; mill phosphatized.

H. Metallic-Coated Steel Sheet Prepainted with Coil Coating: Steel sheet metallic coated by the hot-dip process and prepainted by the coil-coating process to comply with ASTM A 755/A 755M.

1. Zinc-Coated (Galvanized) Steel Sheet: ASTM A 653/A 653M, Structural Steel (SS), Grades 33 through 80 (230 through 550) or High-Strength Low Alloy Steel (HSLAS), Grades 50 through 80 (340 through 550); with G90 (Z275) coating designation.
2. Aluminum-Zinc Alloy-Coated Steel Sheet: ASTM A 792/A 792M, Structural Steel (SS), Grade 50 or 80 (340 or 550); with Class AZ50 (AZM150) coating.

I. Non-High-Strength Bolts, Nuts, and Washers: ASTM A 307, Grade A (ASTM F 568M, Property Class 4.6), carbon-steel, hex-head bolts; ASTM A 563 (ASTM A 563M) carbon-steel hex nuts; and ASTM F 844 plain (flat) steel washers.

1. Finish: **Hot-dip zinc coating, ASTM A 153/A 153M, Class C**.

J. High-Strength Bolts, Nuts, and Washers: ASTM A 325 (ASTM A 325M), Type 1, heavy hex steel structural bolts; ASTM A 563 (ASTM A 563M) heavy hex carbon-steel nuts; and ASTM F 436 (ASTM F 436M) hardened carbon-steel washers.

1. Finish: **Hot-dip zinc coating, ASTM A 153/A 153M, Class C**.

K. High-Strength Bolts, Nuts, and Washers: ASTM A 490 (ASTM A 490M), Type 1, heavy hex steel structural bolts; ASTM A 563 (ASTM A 563M) heavy hex carbon-steel nuts; and ASTM F 436 (ASTM F 436M) hardened carbon-steel washers, plain.

L. Primer: SSPC-Paint 15, Type I, red oxide.

2.3 MATERIALS FOR FIELD-ASSEMBLED METAL PANELS

A. Metallic-Coated Steel Sheet Prepainted with Coil Coating: Steel sheet metallic coated by the hot-dip process and prepainted by the coil-coating process to comply with ASTM A 755/A 755M.

1. Zinc-Coated (Galvanized) Steel Sheet: ASTM A 653/A 653M, Structural Steel (SS), Grades 33 through 80 (230 through 550), with G90 (Z275) coating designation.

2. Aluminum-Zinc Alloy-Coated Steel Sheet: ASTM A 792/A 792M, Structural Steel (SS), Grade 50 or 80 (340 or 550); with Class AZ50 (AZM150) coating designation.
3. Surface: **Smooth, flat** finish.
4. Exposed Finishes: Apply the following coil coating, as specified or indicated on Drawings:

    a. Acrylic-Enamel Coating: Epoxy primer and acrylic-enamel topcoat; with a dry film thickness of not less than 0.2 mil (0.005 mm) for primer and 0.8 mil (0.02 mm) for topcoat.
    b. Siliconized-Polyester Coating: Epoxy primer and silicone-modified, polyester-enamel topcoat; with a dry film thickness of not less than 0.2 mil (0.005 mm) for primer and 0.8 mil (0.02 mm) for topcoat.
    c. High-Performance Organic Finish (2-Coat Fluoropolymer): AA-C12C40R1x (Chemical Finish: cleaned with inhibited chemicals; Chemical Finish: conversion coating; Organic Coating: manufacturer's standard 2-coat, thermocured system consisting of specially formulated inhibitive primer and fluoropolymer color topcoat containing not less than 70 percent polyvinylidene fluoride resin by weight). Prepare, pretreat, and apply coating to exposed metal surfaces to comply with **AAMA 2605** and with coating and resin manufacturers' written instructions, except as modified below:

        1) Humidity Resistance: **2000** hours.
        2) Salt-Spray Resistance: **2000** hours.

    d. Concealed Finish: Apply pretreatment and manufacturer's standard white or light-colored backer finish, consisting of prime coat and wash coat with a total minimum dry film thickness of 0.5 mil (0.013 mm).

2.4 MISCELLANEOUS MATERIALS

A. Fasteners: Self-tapping screws, bolts, nuts, self-locking rivets and bolts, end-welded studs, and other suitable fasteners designed to withstand design loads. Provide fasteners with heads matching color of materials being fastened by means of plastic caps or factory-applied coating.

1. Fasteners for Metal Roof Panels: Self-drilling or self-tapping, zinc-plated, hex-head carbon-steel screws, with a stainless-steel cap or zinc-aluminum-alloy head and EPDM or neoprene sealing washer.
2. Fasteners for Metal Wall Panels: Self-drilling or self-tapping, zinc-plated, hex-head carbon-steel screws, with nylon or polypropylene washer.
3. Fasteners for Metal **Roof and Wall** Panels: Self-drilling Type 410 stainless-steel or self-tapping Type 304 stainless-steel or zinc-alloy-steel hex washer head, with EPDM or PVC washer under heads of fasteners bearing on weather side of metal panels.

B. Metal Panel Sealants:

1. Sealant Tape: Pressure-sensitive, 100 percent solids, gray polyisobutylene compound sealant tape with release-paper backing.
2. Joint Sealant: ASTM C 920; one-part elastomeric polyurethane, polysulfide, or silicone-rubber sealant.

2.5 FABRICATION, GENERAL

A. Tolerances: Comply with MBMA's "Metal Building Systems Manual": Chapter IV, Section 9, "Fabrication and Erection Tolerances."

B. Metal Panels: Provide panel profile, including major ribs and intermediate stiffening ribs, if any, for full length of metal panel.

2.6 STRUCTURAL FRAMING

A. General:

1. Secondary Framing: Shop fabricate framing components to indicated size and section by roll-forming or break-forming, with baseplates, bearing plates, stiffeners, and other plates required for erection welded into place. Cut, form, punch, drill, and weld secondary framing for bolted field connections to primary framing.

   a. Shop Priming: Prepare uncoated surfaces for shop priming according to SSPC-SP 2. Shop prime uncoated secondary structural members with specified primer after fabrication.

B. Secondary Framing: Manufacturer's standard secondary framing members, including purlins, girts, eave struts, flange bracing, base members, gable angles, clips, headers, jambs, and other miscellaneous structural members. Fabricate framing from cold-formed, structural-steel sheet or roll-formed, metallic-coated steel sheet prepainted with coil coating, unless otherwise indicated, to comply with the following:

1. Purlins: C- or Z-shaped sections; fabricated from minimum 0.0598-inch- (1.5-mm-) thick steel sheet, built-up steel plates, or structural-steel shapes; minimum 2-1/2-inch- (64-mm-) wide flanges.

   a. Depth: **As required to comply with system performance requirements**.

2. Girts: C- or Z-shaped sections; fabricated from minimum 0.0598-inch- (1.5-mm-) thick steel sheet, built-up steel plates, or structural-steel shapes. Form ends of Z-sections with stiffening lips angled 40 to 50 degrees to flange and with minimum 2-1/2-inch- (64-mm-) wide flanges.

   a. Depth: **As required to comply with system performance requirements**.

3. Sag Bracing: Minimum 1-by-1-by-1/8-inch (25-by-25-by-3-mm) structural-steel angles.
4. Base or Sill Angles: Minimum 3-by-2-by-0.0598-inch (76-by-51-by-1.5-mm) zinc-coated (galvanized) steel sheet.
5. Purlin and Girt Clips: Minimum 0.0598-inch- (1.5-mm-) thick, steel sheet. Provide galvanized clips where clips are connected to galvanized framing members.
6. Secondary End-Wall Framing: Manufacturer's standard sections fabricated from minimum 0.0598-inch- (1.5-mm-) thick, **zinc-coated (galvanized) steel sheet**.
7. Miscellaneous Structural Members: Manufacturer's standard sections fabricated from cold-formed, structural-steel sheet; built-up steel plates; or zinc-coated (galvanized) steel sheet; designed to withstand required loads.

C. Bracing: Provide adjustable wind bracing as follows:
   1. Bracing: Provide wind bracing using any method specified, at manufacturer's option.

D. Bolts: Provide plain finish bolts for structural-framing components that are primed or finish painted. Provide **hot-dipped galvanized** bolts for structural-framing components that are galvanized.

E. Factory-Primed Finish: Apply specified primer immediately after cleaning and pretreating.

   1. Prime primary, secondary, and end-wall structural-framing members to a minimum dry film thickness of 1 mil (0.025 mm).

      a. Prime secondary steel framing formed from uncoated steel sheet to a minimum dry film thickness of 0.5 mil (0.013 mm) on each side.

   2. Prime galvanized members with specified primer, after phosphoric acid pretreatment.

2.7 METAL ROOF PANELS

A. Vertical-Rib, Standing-Seam Metal Roof Panels: Formed with vertical ribs at panel edges and **flat pan** between ribs; designed for sequential installation by mechanically attaching panels to supports using concealed clips located under one side of panels and engaging opposite edge of adjacent panels.

   1. Material: **Aluminum-zinc alloy-coated** steel sheet, **0.0209 inch (0.55 mm)** thick.

      a. Exterior Finish: **Siliconized polyester**.
      b. Color: **As selected by Owner from manufacturer's full range**.

   2. Clips: Manufacturer's standard, **fixed type** fabricated from **aluminum-zinc alloy-coated steel** sheet.
   3. Joint Type: Panels snapped together.
   4. Joint Type: Mechanically seamed, **folded as standard with manufacturer**.
   5. Panel Coverage: **16 inches (406 mm)**.
   6. Panel Height: **2 inches (51 mm)**.

2.8 FIELD-ASSEMBLED METAL WALL PANELS

A. Tapered-Rib-Profile, Exposed-Fastener Metal Wall Panels: Formed with raised, trapezoidal major ribs and **flat pan** between major ribs; designed to be field assembled by lapping side edges of adjacent panels and mechanically attaching panels to supports using exposed fasteners in side laps.

   1. Material: **Aluminum-zinc alloy-coated** steel sheet, **0.0209 inch (0.55 mm)** thick.

      a. Exterior Finish: **Siliconized polyester**.
      b. Color: **As selected by Owner from manufacturer's full range**.

   2. Major-Rib Spacing: **6 inches (152 mm)** o.c.
   3. Panel Coverage: **36 inches (914 mm)**.

4. Panel Height: **1.5 inches (38 mm)**.

2.9 ACCESSORIES

A. General: Provide accessories as standard with metal building system manufacturer and as specified. Fabricate and finish accessories at the factory to greatest extent possible, by manufacturer's standard procedures and processes. Comply with indicated profiles and with dimensional and structural requirements.

B. Roof Panel Accessories: Provide components required for a complete metal roof panel assembly including copings, fasciae, corner units, ridge closures, clips, sealants, gaskets, fillers, closure strips, and similar items. Match material and finish of metal roof panels, unless otherwise indicated.

1. Closures: Provide closures at eaves and ridges, fabricated of same material as metal roof panels.
2. Clips: Manufacturer's standard, formed from **stainless-steel sheet**, designed to withstand negative-load requirements.
3. Cleats: Manufacturer's standard, mechanically seamed cleats formed from **stainless-steel sheet or nylon-coated aluminum sheet**.
4. Backing Plates: Provide metal backing plates at panel end splices, fabricated from material recommended by manufacturer.
5. Closure Strips: Closed-cell, expanded, cellular, rubber or crosslinked, polyolefin-foam or closed-cell laminated polyethylene; minimum 1-inch- (25-mm-) thick, flexible closure strips; cut or premolded to match metal roof panel profile. Provide closure strips where indicated or necessary to ensure weathertight construction.

C. Wall Panel Accessories: Provide components required for a complete metal wall panel assembly including copings, fasciae, mullions, sills, corner units, clips, sealants, gaskets, fillers, closure strips, and similar items. Match material and finish of metal wall panels, unless otherwise indicated.

1. Closures: Provide closures at eaves and rakes, fabricated of same material as metal wall panels.
2. Closure Strips: Closed-cell, expanded, cellular, rubber or crosslinked, polyolefin-foam or closed-cell laminated polyethylene; minimum 1-inch- (25-mm-) thick, flexible closure strips; cut or premolded to match metal wall panel profile. Provide closure strips where indicated or necessary to ensure weathertight construction.

2.10 SOURCE QUALITY CONTROL

A. Testing Agency: **Engage** a qualified testing and inspecting agency to perform the following tests and inspections and to submit reports.

B. Special Inspector: Owner will engage a qualified special inspector to perform the following tests and inspections and to submit reports. Special Inspector will verify that manufacturer maintains detailed fabrication and quality-control procedures and will review the completeness and adequacy of those procedures to perform the Work.

1. Special inspections will not be required if fabrication is performed by a manufacturer registered and approved by authorities having jurisdiction to perform such Work without special inspection.

    a. After fabrication, submit certificate of compliance with copy to authorities having jurisdiction certifying that Work was performed according to Contract requirements.

C. Tests and Inspections:

1. Welded Connections: In addition to visual inspection, shop-welded connections shall be tested and inspected according to AWS D1.1.

PART 3 - EXECUTION

3.1 ERECTION

A. Before erection proceeds, survey elevations and locations of concrete bearing surfaces and locations of anchor rods, bearing plates, and other embedments, with Erector present, for compliance with requirements and metal building system manufacturer's tolerances.

B. Provide temporary shores, guys, braces, and other supports during erection to keep structural framing secure, plumb, and in alignment against temporary construction loads and loads equal in intensity to design loads. Remove temporary supports when permanent structural framing, connections, and bracing are in place, unless otherwise indicated.

C. Erect metal building system according to manufacturer's written erection instructions and erection drawings.

D. Do not field cut, drill, or alter structural members without written approval from metal building system manufacturer's professional engineer.

E. Secondary Framing: Erect framing true to line, level, plumb, rigid, and secure. Fasten secondary framing to primary framing using clips with field connections using non-high-strength bolts.

1. Provide rake or gable purlins with tight-fitting closure channels and fasciae.
2. Locate and space wall girts to suit openings such as doors and windows.
3. Provide supplemental framing at entire perimeter of openings, including doors, windows, louvers, ventilators, and other penetrations of roof and walls.

3.2 METAL PANEL INSTALLATION, GENERAL

A. General: Anchor metal panels and other components of the Work securely in place, with provisions for thermal and structural movement.

1. Field cut metal panels as required. Cut openings as small as possible, neatly to size required, and without damage to adjacent metal panel finishes. Field cutting of metal panels by torch is not permitted unless approved in writing by manufacturer.

2. Install metal panels perpendicular to structural supports, unless otherwise indicated.
3. Flash and seal metal panels with weather closures at perimeter of openings and similar elements. Fasten with self-tapping screws.
4. Locate metal panel splices over, but not attached to, structural supports with end laps in alignment. Stagger panel splices and end laps to avoid a four-panel lap splice condition.
5. Lap metal flashing over metal panels to allow moisture to run over and off the material.

B. Lap-Seam Metal Panels: Install screw fasteners with power tools having controlled torque adjusted to compress neoprene washer tightly without damage to washer, screw threads, or metal panels. Install screws in predrilled holes. Arrange and nest side-lap joints so prevailing winds blow over, not into, lapped joints. Lap ribbed or fluted sheets one full rib corrugation.

C. Metal Protection: Where dissimilar metals will contact each other or corrosive substrates, protect against galvanic action by painting contact surfaces with bituminous coating, by applying rubberized-asphalt underlayment to each contact surface, or by other permanent separation as recommended by metal roof panel manufacturer.

D. Joint Sealers: Install gaskets, joint fillers, and sealants where indicated and where required for weatherproof performance of metal panel assemblies. Provide types of gaskets, fillers, and sealants indicated or, if not indicated, types recommended by metal panel manufacturer.

3.3 METAL ROOF PANEL INSTALLATION

A. General: Provide metal roof panels of full length from eave to ridge, unless otherwise indicated or restricted by shipping limitations.

B. Field-Assembled, Standing-Seam Metal Roof Panels: Fasten metal roof panels to supports with concealed clips at each standing-seam joint at location, spacing, and with fasteners recommended by manufacturer.

1. Install clips to supports with self-tapping fasteners.
2. Seamed Joint: Crimp standing seams with manufacturer-approved motorized seamer tool so clip, metal roof panel, and factory-applied sealant are completely engaged.

3.4 METAL WALL PANEL INSTALLATION

A. General: Install metal wall panels in orientation, sizes, and locations indicated on Drawings. Install panels perpendicular to girts, extending full height of building, unless otherwise indicated. Anchor metal wall panels and other components of the Work securely in place, with provisions for thermal and structural movement.

1. When two rows of metal panels are required, lap panels 4 inches (102 mm) minimum.
2. When building height requires two rows of metal panels at gable ends, align lap of gable panels over metal wall panels at eave height.
3. Rigidly fasten base end of metal wall panels and allow eave end free movement due to thermal expansion and contraction. Predrill panels.
4. Flash and seal metal wall panels with weather closures at eaves, rakes, and at perimeter of all openings. Fasten with self-tapping screws.
5. Install screw fasteners in predrilled holes.

6. Apply elastomeric sealant continuously between metal base channel (sill angle) and concrete, and elsewhere as indicated, or if not indicated, as necessary for waterproofing.
7. Align bottom of metal wall panels and fasten with blind rivets, bolts, or self-tapping screws.
8. Provide weatherproof escutcheons for pipe and conduit penetrating exterior walls.

B. Field-Assembled, Metal Wall Panels: Install metal wall panels on exterior side of girts. Attach metal wall panels to supports with fasteners as recommended by manufacturer.

3.5 FIELD QUALITY CONTROL

A. Testing Agency: **Engage** a qualified testing and inspecting agency to perform the following tests and inspections and to submit reports.

B. Special Inspector: Owner will engage a qualified special inspector to perform the following tests and inspections and to submit reports.

C. Tests and Inspections:

1. High-Strength, Field-Bolted Connections: Connections shall be inspected during installation according to RCSC's "Specification for Structural Joints Using ASTM A 325 or A 490 Bolts."
2. Welded Connections: In addition to visual inspection, field-welded connections shall be tested and inspected according to AWS D1.1.

3.6 CLEANING AND PROTECTION

A. Repair damaged galvanized coatings on galvanized items with galvanized repair paint according to ASTM A 780 and manufacturer's written instructions.

B. Remove and replace glass that has been broken, chipped, cracked, abraded, or damaged during construction period.

C. Touchup Painting: After erection, promptly clean, prepare, and prime or reprime field connections, rust spots, and abraded surfaces of prime-painted structural framing**, bearing plates,** and accessories.

1. Clean and prepare surfaces by SSPC-SP 2, "Hand Tool Cleaning," or SSPC-SP 3, "Power Tool Cleaning."
2. Apply a compatible primer of same type as shop primer used on adjacent surfaces.

END OF SECTION 13125

DEMOLITION AND DISPOSAL NOTES

1. MATERIALS WHICH ARE REMOVED SHALL BE 100% RECOVERED AND PROPERLY DISPOSED OF BY THE CONTRACTOR AT NO ADDITIONAL COST TO THE CONTRACT. THE CONTRACTOR SHALL SUBMIT AN EXECUTED "CERTIFICATE OF DUMPING FACILITY" IF SO REQUESTED BY THE OWNER OR ENGINEER.

2. CONTRACTOR SHALL ADEQUATELY PROTECT ADJACENT PROPERTY AND EXISTING BUILDING CONSTRUCTION DURING THE WORK. DAMAGE TO THE PROPERTY, BUILDING, OR SURROUNDING ITEMS AS A RESULT OF THE WORK SHALL BE REPLACED OR REPAIRED BY THE CONTRACTOR TO THE SATISFACTION OF THE OWNER AT NO ADDITIONAL COST.

3. CONTRACTOR SHALL PROVIDE NECESSARY MEANS OF PROTECTION FOR THE PUBLIC, INCLUDING TEMPORARY COVERINGS, BARRICADES, WARNING SIGNS AND TAPE, ETC. DURING THE COURSE OF WORK.

METAL BUILDING NOTES

1. EXISTING FOUNDATIONS & METAL BUILDING MEETS THE FOLLOWING LOADS BASED UPON THE 6TH EDITION MASSACHUSETTS STATE BUILDING CODE.

   ROOF SNOW LOAD: 30 PSF SNOW
   ROOF DEAD: 5 PSF
   WIND & SEISMIC IN ACCORDANCE WITH SECTION 1609.0 & 1614.0

2. NO ADDITIONAL LOADS FROM CRANES, OFFICES, SUSPENDED MECHANICAL UNITS, ETC. SHALL BE INTRODUCED TO THE BUILDING UNLESS APPROVED BY THE STRUCTURAL ENGINEER.

3. IF LOADING IS DIFFERENT THAN ABOVE, CONTACT THE ENGINEER IMMEDIATELY.

4. BUILDING SHALL INCLUDE A "SEMI-FLUSH" WALL GIRT AT END WALLS AND AT SIDE WALLS.

5. TORCH CUTTING OF STEEL TO ATTEMPT CORRECTIONS IS NOT ALLOWED. HOLES IN STEEL SHALL BE DRILLED OR SHOP PUNCHED.

ROOF METAL DECKING NOTES:

1. STEEL ROOF DECKING SHALL BE TYPE "B" 1½" INCH DEPTH 18 GAUGE MINIMUM AND SHALL CONFORM TO ASTM DESIGNATION A653 GRADE 33 (FOR GALVANIZED DECK) HAVING A MINIMUM YIELD STRENGTH OF 33,000 PSI. THE MAXIMUM WORKING STRESS SHALL NOT EXCEED 20,000 PSI.

2. ROOF DECK SHALL BE CAPABLE OF SUPPORTING THE DESIGN LOADS SHOWN ON THE DRAWING AND AS REQUIRED BY THE CURRENT MASSACHUSETTS STATE BUILDING CODE.

3. THE DEFLECTION OF THE DECK UNDER DESIGN LIVE LOAD SHALL NOT EXCEED 1/240 OF THE SPAN.

4. DECKING SHALL BE HOT-DIP GALVANIZED. GALVANIZING SHALL CONFORM TO THE REQUIREMENT OF ASTM A653 COATING CLASS G60 OR G90.

5. DECKING SHALL BE WELDED TO STEEL ROOF JOIST AS PER MANUFACTURER'S RECOMMENDATIONS AND THE STEEL DECK INSTITUTE REQUIREMENTS. ARC PUDDLE WELD SHALL BE AT LEAST 5/8" INCH IN DIAMETER, MAXIMUM SPACING AT 12 INCHES O.C., (36/4 WELD PATTERN) OR ELONGATED, HAVING AN EQUAL PERIMETER. FILLET WELDS (WHEN USED) SHALL BE APPROXIMATELY 1 INCH LONG. USE NO.10 SIDE LAP SCREWS SPACED 18" O.C.

6. SUBMIT DESIGN CAPACITIES, DETAILS, INSTALLATION REQUIREMENTS, REQUIRED LAPS, PLANS, ETC. TO THE ENGINEER FOR REVIEW PRIOR TO FABRICATION. END LAPS OF SHEETS SHALL BE A MINIMUM OF 2" AND SHALL OCCUR OVER SUPPORTS. MINIMUM END BEARING FOR SHEETS SHALL BE 1½".

7. STEEL ROOF DECK SHALL BE PLACED WITH A MINIMUM 2 SPAN CONDITION.

COASTAL engineering co.
260 Cranberry Hwy, Orleans, MA 02653
508.255.6511 P 508.255.6700 F

NO.	DATE	REVISION	BY

SEAL

COMMONWEALTH OF MASSACHUSETTS
PAUL R. LAROCHELLE
CIVIL
No. 45560
REGISTERED PROFESSIONAL ENGINEER

PROJECT: WELLFLEET TRANSFER STATION
370 COLES NECK ROAD WELLFLEET, MA

SHEET TITLE: GENERAL NOTES

SCALE	AS NOTED
DESIGN BY	PRL
DATE	02/01/2016
DRAWN BY	AEM/PRL
CHECKED BY	PRL

S-100

1 OF 6 SHEETS

PROJECT: NO. C18408.00

Coastal Engineering Co., Inc. © 2016

F:\SDS\PROJECTS\C18000\C18408\STRUCT\03_DWG_CEC-24X36-S-100.DWG 2/1/2016 @ 1:28 PM

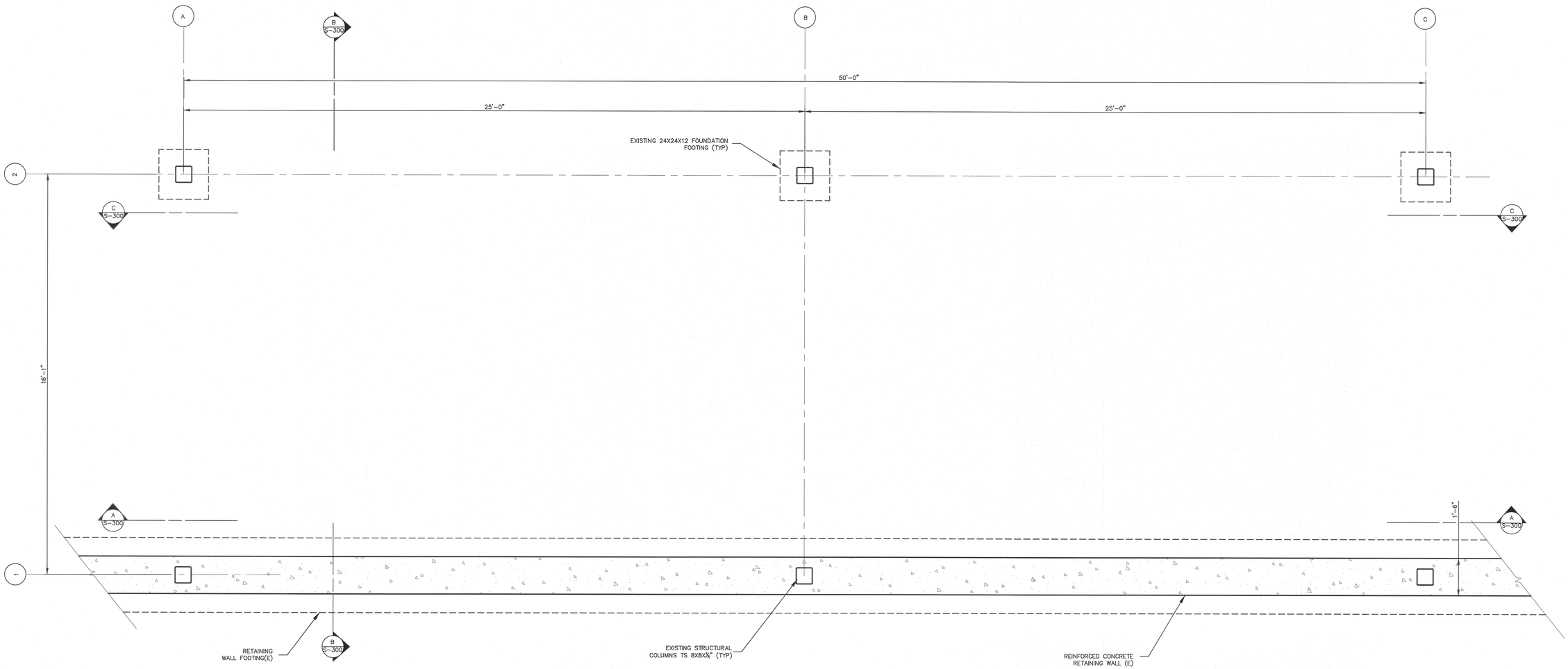

EXISTING FOUNDATION PLAN

SCALE: 1/2" = 1'-0"

DEMOLITION NOTES:

1. MAINTAIN EXISTING FOUNDATION.

CONSTRUCTION NOTES:

1. INSPECT VISIBLE CONCRETE FOR OPEN CRACKS LARGER THAN ⅛" INCH, AND DOCUMENT LOCATIONS FOR REVIEW BY ENGINEER OF RECORD.

COASTAL
engineering co.
260 Cranberry Hwy, Orleans, MA 02653
508.255.6511 P 508.255.6700 F

NO.	DATE	REVISION	BY

SEAL

COMMONWEALTH OF MASSACHUSETTS
PAUL R. LaROCHELLE
CIVIL
No. 45560
REGISTERED PROFESSIONAL ENGINEER

PROJECT: WELLFLEET TRANSFER STATION
370 COLES NECK ROAD WELLFLEET, MA

SHEET TITLE: EXISTING FOUNDATION PLAN

SCALE	AS NOTED
DESIGN BY	PRL
DATE	02/01/2016
DRAWN BY	AEM/PRL
CHECKED BY	PRL

S-200

2 OF 6 SHEETS

PROJECT: NO. C18408.00

Coastal Engineering Co., Inc © 2016

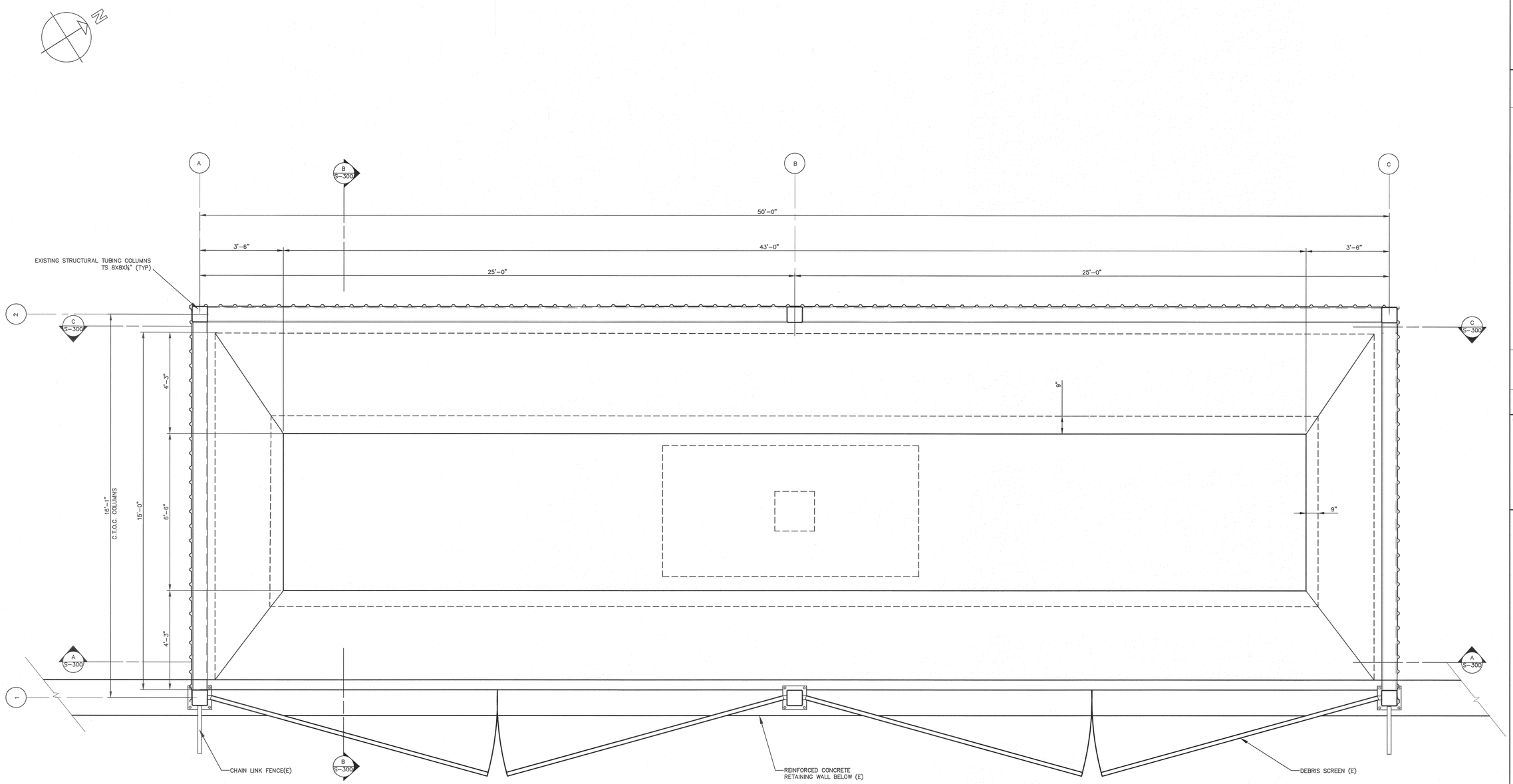

EXISTING HOPPER MAIN LEVEL PLAN

SCALE: 1/2" = 1'-0"

DEMOLITION NOTES:

1. REMOVE CONDUITS, LIGHTS AND ACCESSORIES ATTACHED TO THE BUILDING. SALVAGE LIGHTS.
2. REMOVE WALL SIDING ON THREE SIDES TO EXPOSE GIRTS.
3. REMOVE "Z" GIRTS. LEAVE ANGLE CLIPS AND BRACING.
4. RE-USE SAFETY GATES. DO NOT REMOVE.
5. DISPOSE OF REMOVED MATERIALS BY ENVIRONMENTALLY APPROVED METHOD.

CONSTRUCTION NOTES:

1. CLEAN REMAINING STEEL TO ALLOW FOR APPLICATION OF PRIMER PAINT.
2. INSTALL PRE-PRIMED REPLACEMENT GIRTS.
3. PAINT STRUCTURAL STEEL WITH TWO COATS OF EPOXY PAINT.
4. INSTALL REPLACEMENT STEEL SIDING AS REQUIRED.

COASTAL
engineering co.
260 Cranberry Hwy, Orleans, MA 02653
508.255.6511 P 508.255.6700 F

NO.	DATE	REVISION	BY

SEAL

COMMONWEALTH OF MASSACHUSETTS
PAUL R. LAROCHELLE
CIVIL
No. 45560
REGISTERED PROFESSIONAL ENGINEER

PROJECT:
WELLFLEET TRANSFER STATION
370 COLES NECK ROAD WELLFLEET, MA

SHEET TITLE:
EXISTING HOPPER AND MAIN LEVEL DEMOLITION PLAN

SCALE	AS NOTED
DESIGN BY	PRL
DATE	02/01/2016
DRAWN BY	AEM/PRL
CHECKED BY	PRL

S-201

3 OF 6 SHEETS

PROJECT NO. C18408.00

Coastal Engineering Co., Inc. © 2016

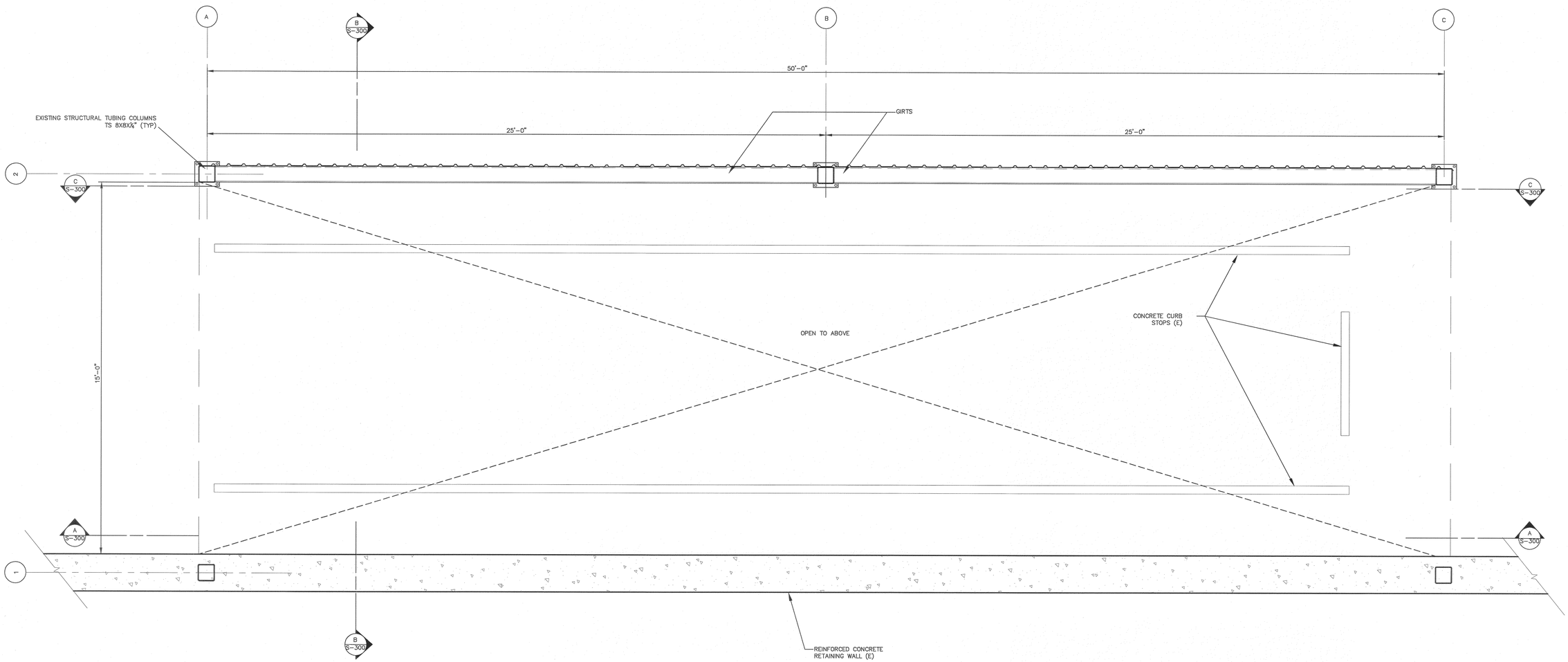

EXISTING HOPPER LOWER LEVEL PLAN

SCALE: 1/2" = 1'-0"

DEMOLITION NOTES:

1. REMOVE CONDUITS, LIGHTS AND ACCESSORIES FROM BUILDING EXTERIOR. SALVAGE LIGHTS FOR RE–USE.
2. REMOVE WALL SIDING ON TWO SIDES TO EXPOSE "Z" GIRTS.
3. REMOVE GIRTS. LEAVE ANGLE CLIPS AND BRACING.
4. DISPOSE OF REMOVED MATERIALS BY ENVIRONMENTALLY APPROVED METHOD.

CONSTRUCTION NOTES:

1. CLEAN REMAINING STEEL TO ALLOW FOR APPLICATION OF PRIMER PAINT.
2. INSTALL PRE–PRIMED REPLACEMENT GIRTS.
3. PAINT ALL STEEL WITH TWO COATS OF EPOXY PAINT.
4. INSTALL REPLACEMENT STEEL SIDING AS REQUIRED.

COASTAL
engineering co.
260 Cranberry Hwy, Orleans, MA 02653
508.255.6511 P 508.255.6700 F

NO.	DATE	REVISION	BY

SEAL

COMMONWEALTH OF MASSACHUSETTS
PAUL R. LaROCHELLE
CIVIL
No. 45560
REGISTERED PROFESSIONAL ENGINEER

PROJECT: WELLFLEET TRANSFER STATION
370 COLES NECK ROAD WELLFLEET, MA

SHEET TITLE: EXISTING HOPPER AND LOWER LEVEL DEMOLITION PLAN

SCALE	AS NOTED
DESIGN BY	PRL
DATE	02/01/2016
DRAWN BY	AEM/PRL
CHECKED BY	PRL

S-202

4 OF 4 SHEETS

PROJECT: NO. C18408.00

Coastal Engineering Co., Inc. © 2016

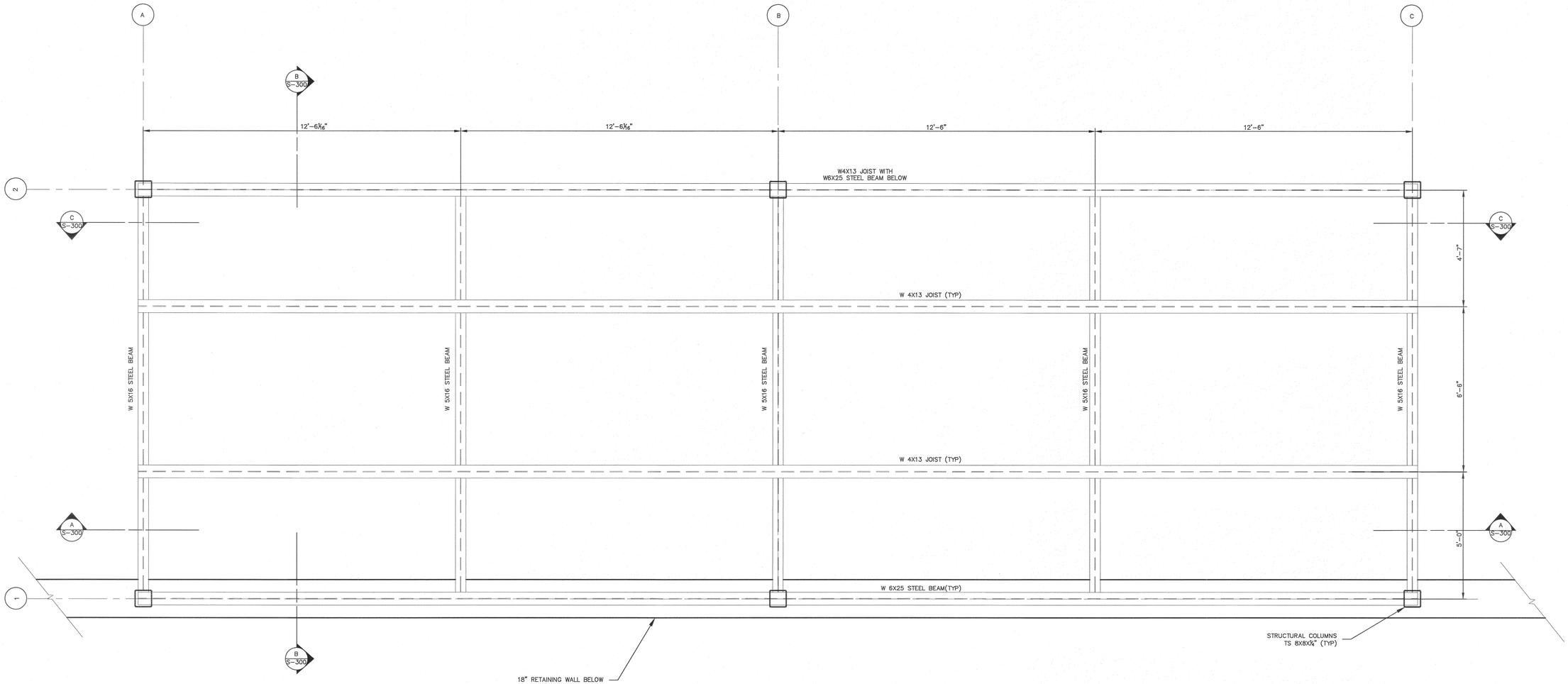

DEMOLITION NOTES:

1. REMOVE ROOFING PANELS.
2. DO NOT REMOVE STEEL JOISTS OR BEAMS.
3. DISPOSE OF REMOVED MATERIALS BY ENVIRONMENTALLY APPROVED METHOD.

CONSTRUCTION NOTES:

1. CLEAN REMAINING STEEL TO ALLOW FOR APPLICATION OF PRIMER PAINT.
2. PAINT ALL STEEL WITH TWO COATS OF EPOXY PAINT.
3. INSTALL REPLACEMENT STEEL SIDING AS REQUIRED.

EXISTING HOPPER ROOF FRAMING PLAN

SCALE: 1/2" = 1'-0"

COASTAL engineering co.
260 Cranberry Hwy, Orleans, MA 02653
508.255.6511 P 508.255.6700 F

NO.	DATE	REVISION	BY

SEAL

COMMONWEALTH OF MASSACHUSETTS
PAUL R. LAROCHELLE
CIVIL No. 45560
REGISTERED PROFESSIONAL ENGINEER

PROJECT: WELLFLEET TRANSFER STATION
370 COLES NECK ROAD WELLFLEET, MA

SHEET TITLE: EXISTING HOPPER ROOF FRAMING PLAN

SCALE	AS NOTED
DESIGN BY	PRL
DATE	02/01/2016
DRAWN BY	AEM/PRL
CHECKED BY	PRL

S-203

5 OF 6 SHEETS

PROJECT: NO. C18408.00

Coastal Engineering Co., Inc. © 2016

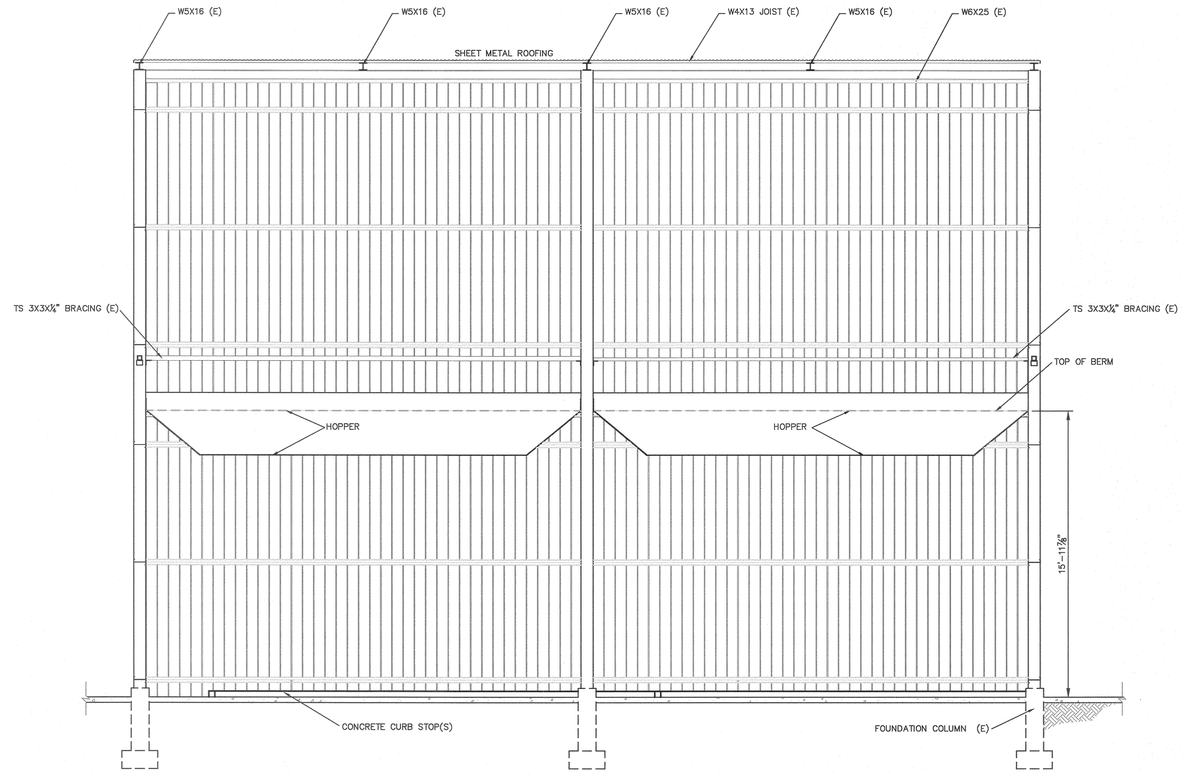

SECTION A-A

SCALE: 1/4" = 1'-0"

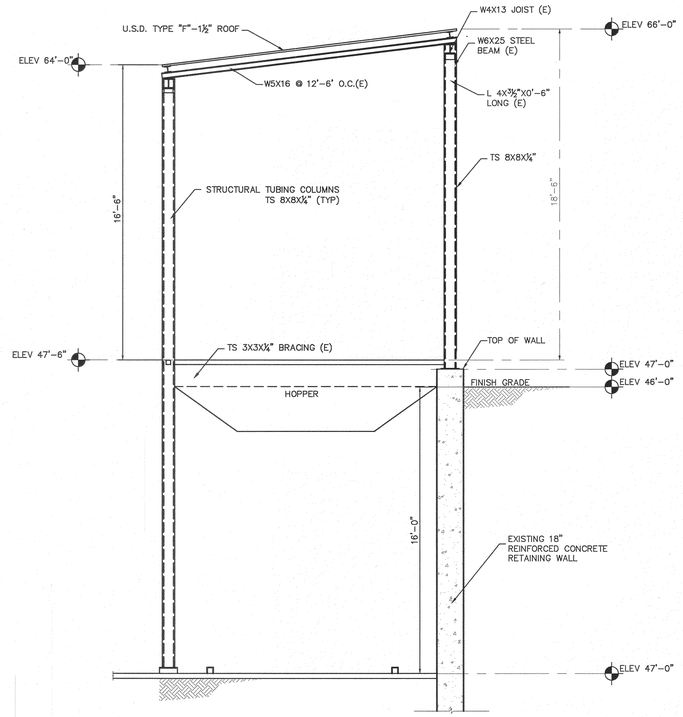

SECTION B-B

SCALE: 1/4" = 1'-0"

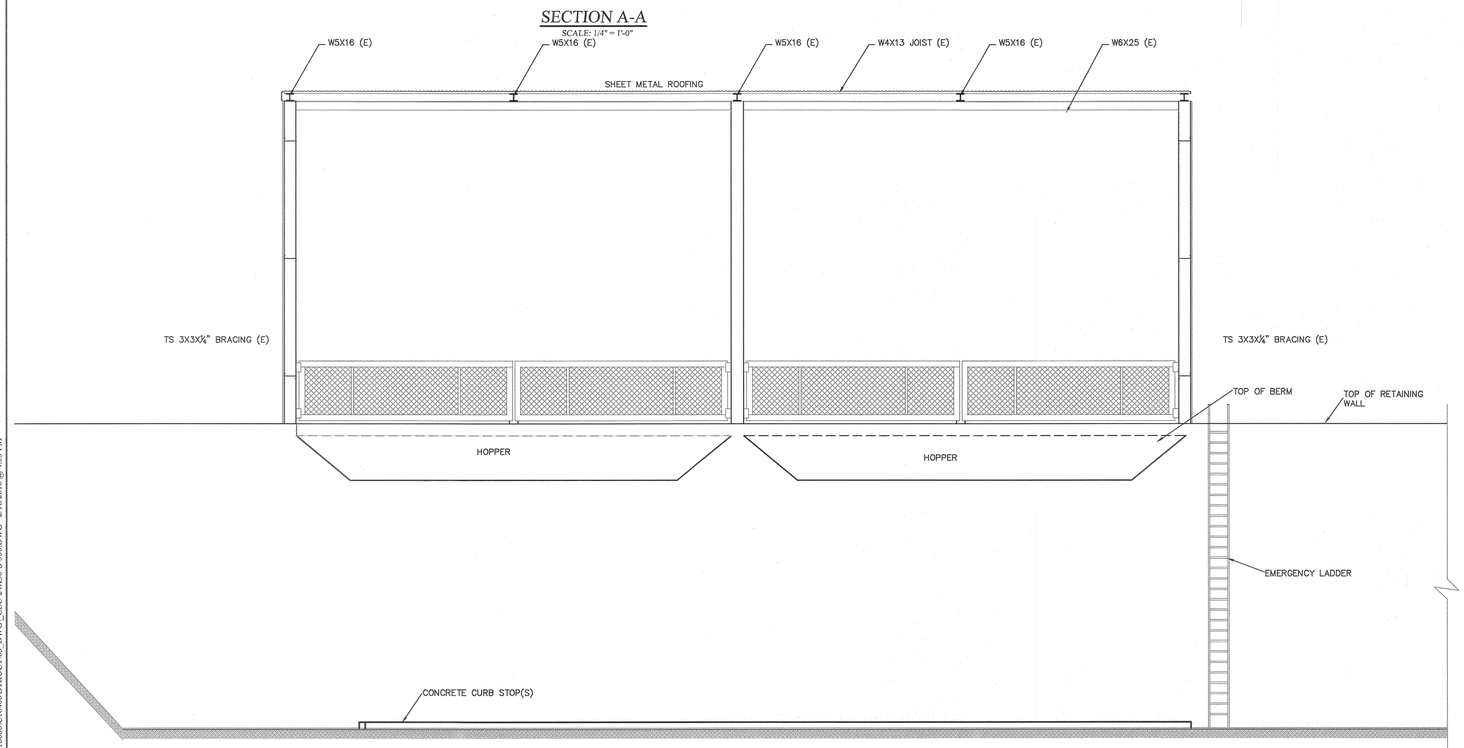

SECTION C-C

SCALE: 1/4" = 1'-0"

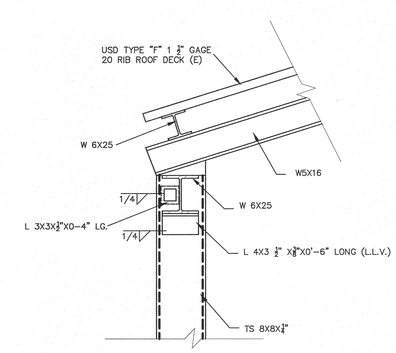

EXISTING CONNECTION DETAIL AT TOP OF COLUMNS

SCALE: 1" = 1'-0"

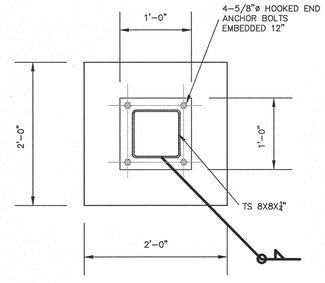

EXISTING CONNECTION DETAIL AT BOTTOM OF COLUMN

SCALE: 1" = 1'-0"

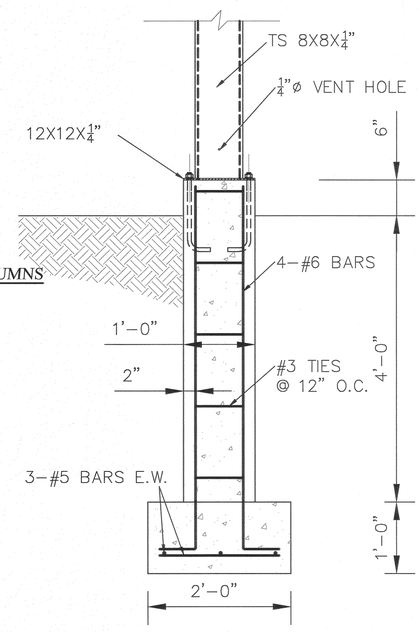

EXISITNG TYPICAL COLUMN FOUNDATION

SCALE: 1/2" = 1'-0"

COASTAL engineering co.
260 Cranberry Hwy, Orleans, MA 02653
508.255.6511 P 508.255.6700 F

NO.	DATE	REVISION	BY

SEAL

COMMONWEALTH OF MASSACHUSETTS
PAUL R. LAROCHELLE
CIVIL
No. 45560
REGISTERED PROFESSIONAL ENGINEER

PROJECT: WELLFLEET TRANSFER STATION
370 COLES NECK ROAD WELLFLEET, MA
SHEET TITLE: EXISTING BUILDING ELEVATIONS

SCALE	AS NOTED
DESIGN BY	PRL
DATE	02/01/2016
DRAWN BY	AEM/PRL
CHECKED BY	PRL

S-300

6 OF 6 SHEETS

PROJECT: NO. C18408.00

Coastal Engineering Co., Inc. © 2016

F:\SDSK\PROJ\C18000\C18408\STRUCT\03_DWG_CEC-24X36-S-300.DWG 2/16/2016 @ 4:53 PM